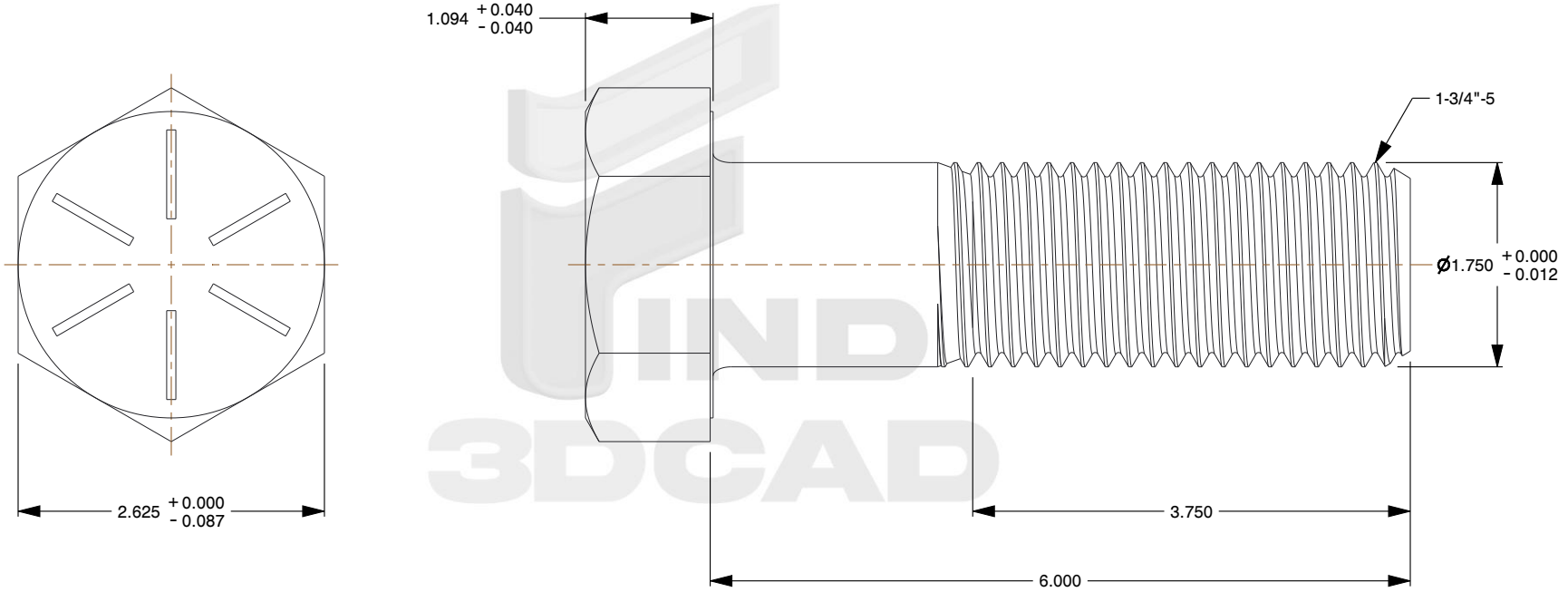

Notes:

1. **Category:** Cap Screws
2. **System of Measurement:** Inch
3. **Head Style:** Hex Head
4. **Head Style Detail:** Washer Face
5. **Head Markings:** Six radial lines 60 degrees apart and manufacturer ID
6. **Drive Style:** External Hex Drive
7. **Pitch:** UNC Coarse Thread
8. **Thread Direction:** Right-Hand Thread
9. **Point:** Chamfered Point
10. **Material:** Steel
11. **Material Grade:** Grade 8
12. **Coating:** Uncoated
13. **Standards and Specifications:** ASME B18.2.1 and SAE J429

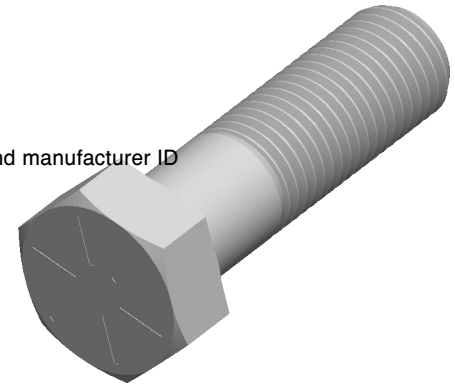

find3dcad

THIRD ANGLE PROJECTION

This file and the related information are provided for reference only and may change without notice. find3dcad does not guarantee the accuracy, completeness, or suitability of this file or the information provided. You are responsible for how you use this file and its information.

This document is the property of find3dcad. The information in it may not be copied, shared, or given to any third party without written permission from find3dcad.

TITLE	DESCRIPTION
Hex Cap Screw	1-3/4"-5 X 6" Hex Head Cap Screws Bolts, UNC Coarse Thread, Grade 8 Steel, Plain

Sheet Size	PART NUMBER	Rev.	ISSUED
A	IAHHCSB056-1345X6	01	2026-10-13

SCALE: 0.671 | Unless otherwise specified Dimensions are in INCHES