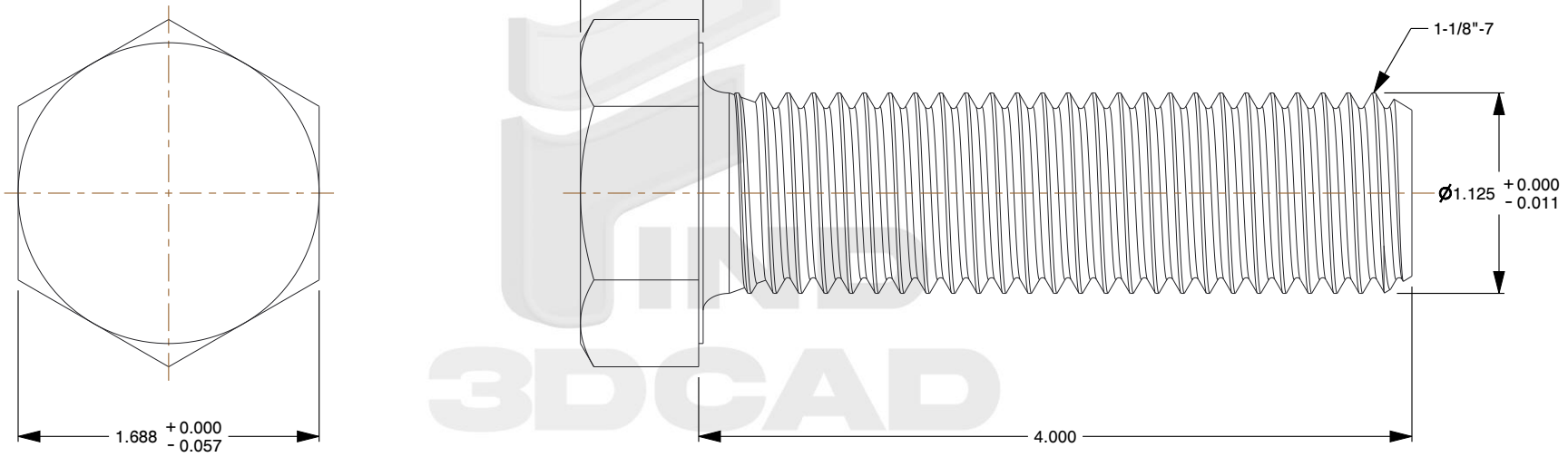

Notes:

1. **Category:** Cap Screws
2. **System of Measurement:** Inch
3. **Head Style:** Hex Head
4. **Head Style Detail:** Washer Face
5. **Drive Style:** External Hex Drive
6. **Thread Length:** Full Thread
7. **Thread Direction:** Right-Hand Thread
8. **Point:** Chamfered Point
9. **Material:** Stainless Steel
10. **Material Grade:** AISI 316 Stainless Steel
11. **Coating:** Uncoated
12. **Standards and Specifications:** ASME B18.2.1

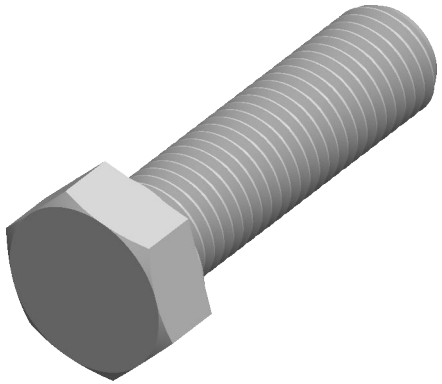

find3dcad

THIRD ANGLE PROJECTION

This file and the related information are provided for reference only and may change without notice. find3dcad does not guarantee the accuracy, completeness, or suitability of this file or the information provided. You are responsible for how you use this file and its information.

This document is the property of find3dcad. The information in it may not be copied, shared, or given to any third party without written permission from find3dcad.

TITLE	DESCRIPTION
Hex Cap Screw	1-1/8"-7 X 4" Hex Head Cap Screws Bolts, Full Thread, AISI 316 Stainless Steel

Sheet Size	PART NUMBER	Rev.	ISSUED
A	IAHHCSB318-1187X4	01	2026-10-19

SCALE: 1.023

Unless otherwise specified Dimensions are in INCHES