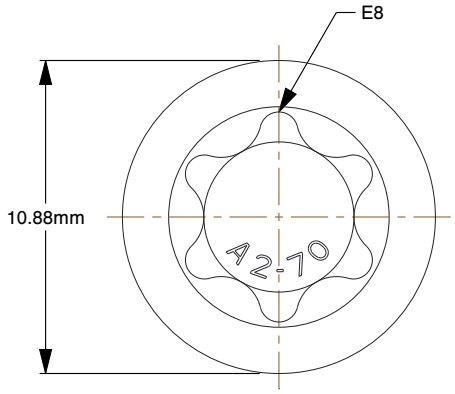

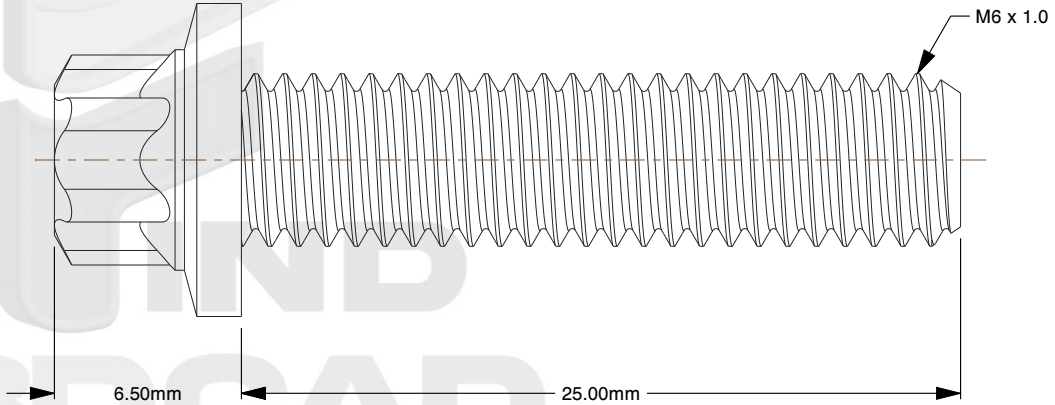

Notes:

1. **Specification:** DIN 34800
2. **Thread Diameter + Pitch:** M6X1.0
3. **Length:** 25mm
4. **Thread Amount:** Full Thread
5. **Threaded Length:** 25mm
6. **Unthreaded Length:** 0mm
7. **Material:** A2-70 Stainless Steel
8. **Finish:** Plain
9. **Flange Type:** Smooth
10. **Flange Width:** 10.88mm
11. **Head Height:** 6.5mm
12. **Drive:** Torx E8
13. **Type Screw/Bolt:** External Torx Flange
14. **Thread Direction:** Right Hand
15. **Measurement System:** Metric

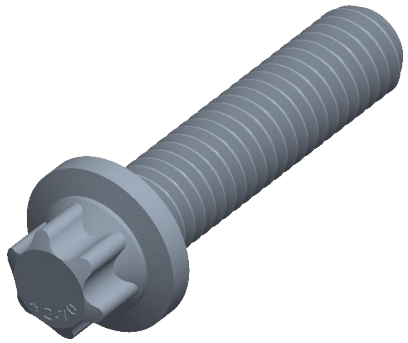

	THIRD ANGLE PROJECTION
This file and the related information are provided for reference only and may change without notice. find3dcad does not guarantee the accuracy, completeness, or suitability of this file or the information provided. You are responsible for how you use this file and its information.	This document is the property of find3dcad. The information in it may not be copied, shared, or given to any third party without written permission from find3dcad.
TITLE External Torx Flange Bolts	PART NUMBER MDETFB6X25SS

PART NUMBER	DESCRIPTION
MDETFB6X25SS	M6 External Torx Flange Stainless Steel A2-70 DIN 34800 Six-Lobe

Sheet Size	Design Code	Drawing No.	Rev.	ISSUED
A	001	10001	01	2026-10-13
SCALE: 3.806		Unless otherwise specified Dimensions are in INCHES		