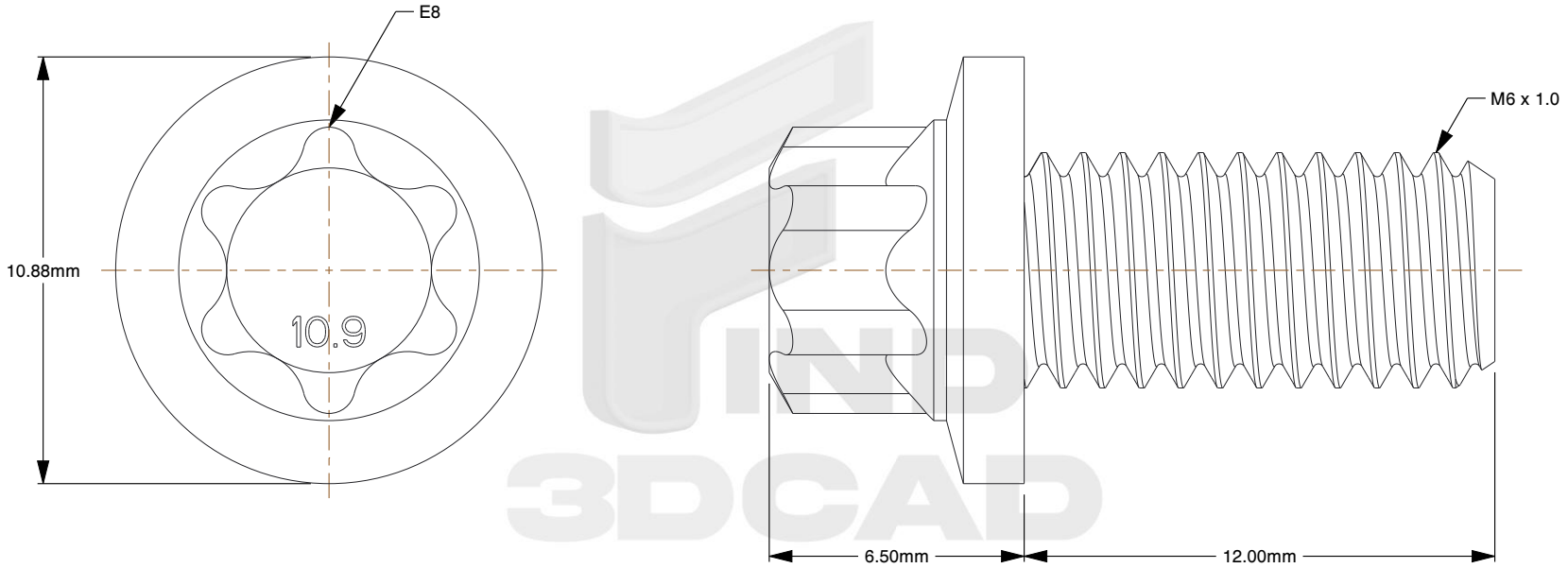

Notes:

1. **Specification:** DIN 34800
2. **Thread Diameter + Pitch:** M6X1.0
3. **Length:** 12mm
4. **Thread Amount:** Full Thread
5. **Threaded Length:** 12mm
6. **Unthreaded Length:** 0mm
7. **Material:** Class 10.9 Steel
8. **Finish:** Zinc Plated
9. **Flange Type:** Smooth
10. **Flange Width:** 10.88mm
11. **Head Height:** 6.5mm
12. **Drive:** Torx E8
13. **Type Screw/Bolt:** External Torx Flange
14. **Thread Direction:** Right Hand
15. **Measurement System:** Metric

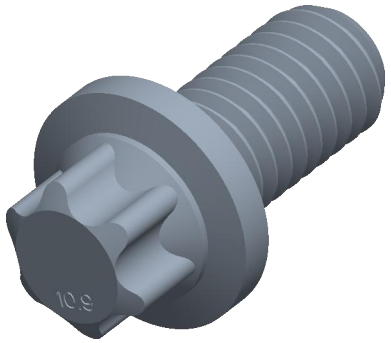

THIRD ANGLE PROJECTION

This file and the related information are provided for reference only and may change without notice. find3dcad does not guarantee the accuracy, completeness, or suitability of this file or the information provided. You are responsible for how you use this file and its information.

This document is the property of find3dcad. The information in it may not be copied, shared, or given to any third party without written permission from find3dcad.

TITLE	PART NUMBER
External Torx Flange Bolts	MDETFB6X12CLZ

PART NUMBER	DESCRIPTION
MDETFB6X12CLZ	M6 External Torx Flange Steel Class 10.9 Zinc DIN 34800 Six-Lobe

Sheet Size	Design Code	Drawing No.	Rev.	ISSUED
A	001	10001	01	2026-10-20

SCALE: 5.490

Unless otherwise specified Dimensions are in INCHES