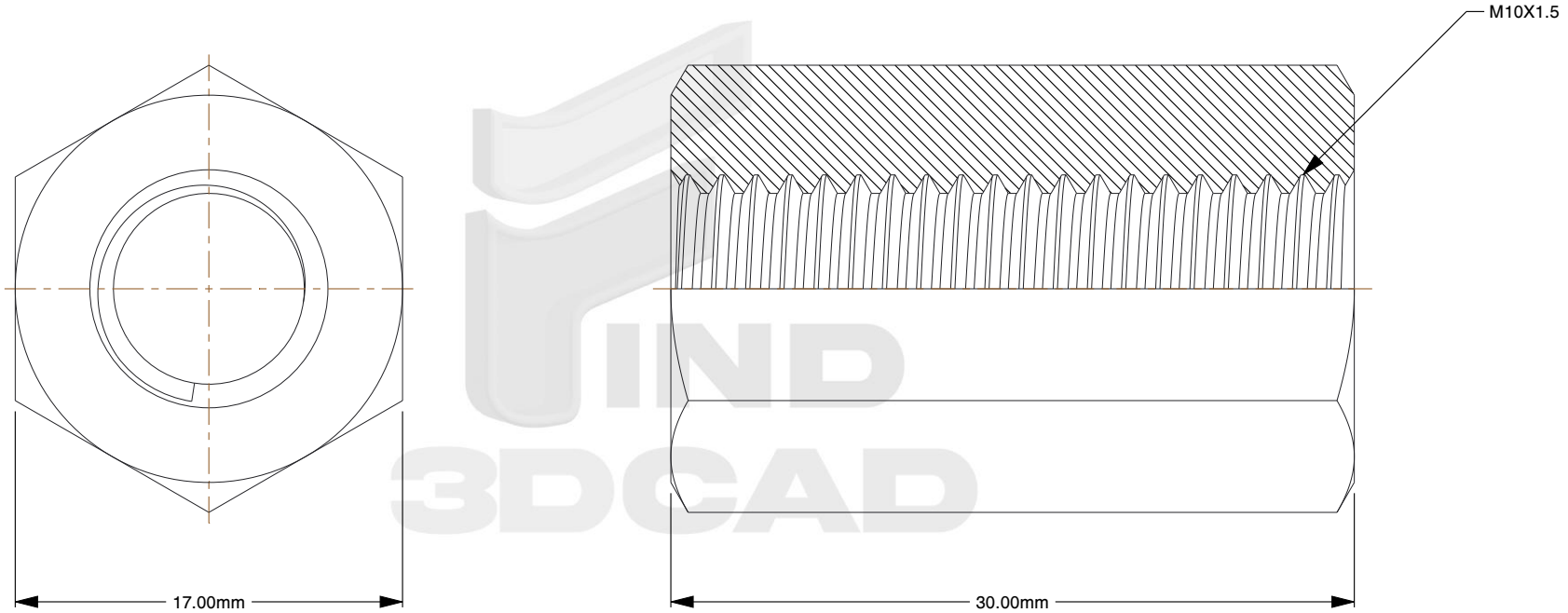


Notes:

1. **Thread Diameter + Pitch:** M10X1.5
2. **Thread Direction:** Right Hand
3. **Type:** Coupling Nut
4. **Material:** Class 6 Steel
5. **Finish:** Zinc Plated
6. **Drive:** 17mm Wrench
7. **Profile:** Normal
8. **Overall Length:** 30mm
9. **Measurement System:** Metric
10. **Specification:** DIN 6334

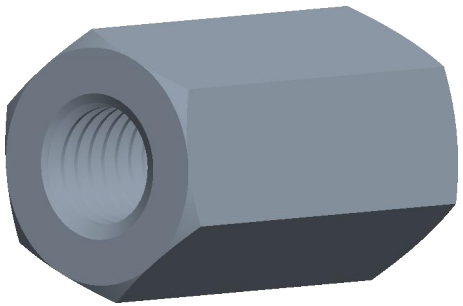

find3dcad

THIRD ANGLE PROJECTION

This file and the related information are provided for reference only and may change without notice. find3dcad does not guarantee the accuracy, completeness, or suitability of this file or the information provided. You are responsible for how you use this file and its information.

This document is the property of find3dcad. The information in it may not be copied, shared, or given to any third party without written permission from find3dcad.

| TITLE | DESCRIPTION |
|---|---|
| Hex Coupling Nut | Hex Coupler Nut DIN 6334<br>Steel Class 6 Zinc<br>Length 3x Diameter |

| Sheet Size | PART NUMBER | Rev. | ISSUED |
|---|---|---|---|
| A | MDHCN10X30CLZ | 01 | 2026-10-19 |

SCALE: 3.235

Unless otherwise specified Dimensions are in MILLIMETERS