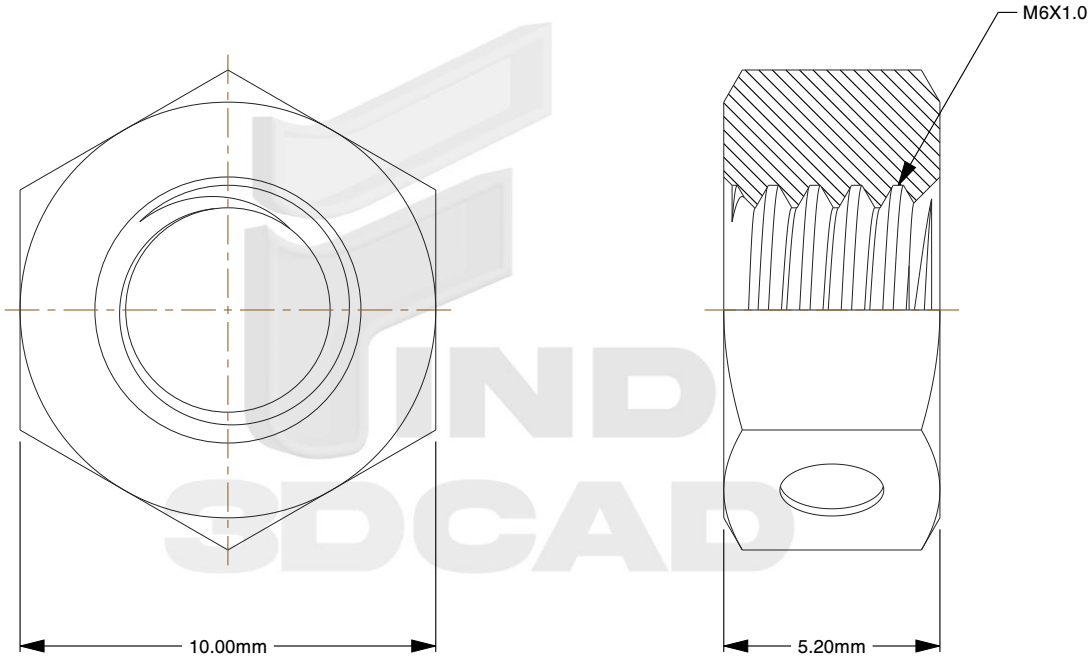

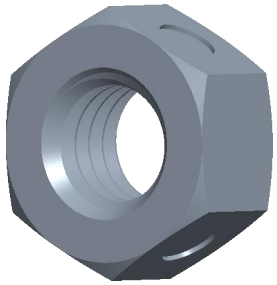

Notes:

1. **Thread Diameter + Pitch:** M6X1.0
2. **Thread Direction:** Right Hand
3. **Type:** Biloc Nut
4. **Material:** Class 10 Steel
5. **Finish:** Zinc Plated
6. **Drive:** 10mm Wrench
7. **Height:** 5.2mm
8. **Profile:** Normal
9. **Measurement System:** Metric

find3dcad

THIRD ANGLE PROJECTION

This file and the related information are provided for reference only and may change without notice. find3dcad does not guarantee the accuracy, completeness, or suitability of this file or the information provided. You are responsible for how you use this file and its information.

This document is the property of find3dcad. The information in it may not be copied, shared, or given to any third party without written permission from find3dcad.

TITLE	DESCRIPTION
Biloc Nut	Biloc Lock Nut Class 10 Steel, Zinc Bi-Directional Locking

Sheet Size	PART NUMBER	Rev.	ISSUED
A	MDBN6CLZ	01	2026-10-13

SCALE: 5.499	Unless otherwise specified Dimensions are in MILLIMETERS