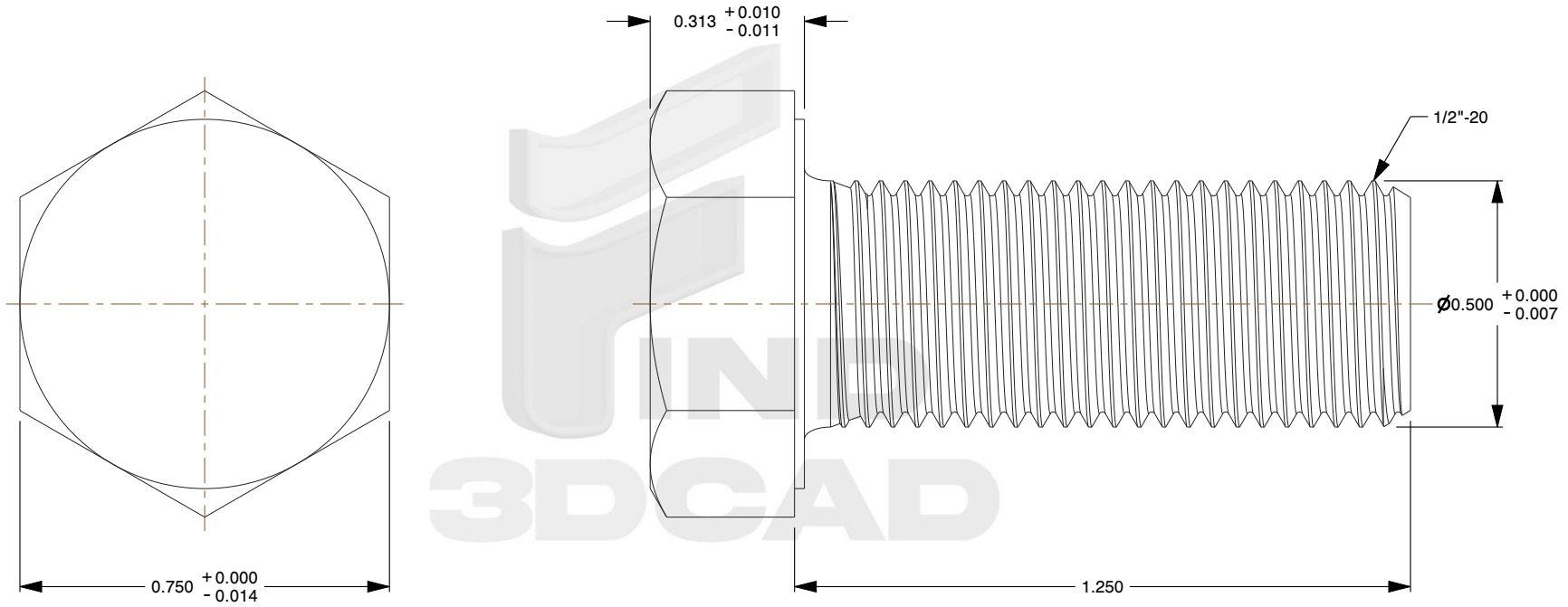

Notes:

1. **Category:** Cap Screws
2. **System of Measurement:** Inch
3. **Head Style:** Hex Head
4. **Head Style Detail:** Washer Face
5. **Drive Style:** External Hex Drive
6. **Pitch:** Fine Thread
7. **Thread Direction:** Right-Hand Thread
8. **Point:** Chamfered Point
9. **Material:** Stainless Steel
10. **Material Grade:** 18-8 Stainless Steel
11. **Material Processes:** Passivated
12. **Coating:** Uncoated
13. **Origin:** Made in U.S.A.
14. **Standards and Specifications:** MS35308 Rev E, DFARS

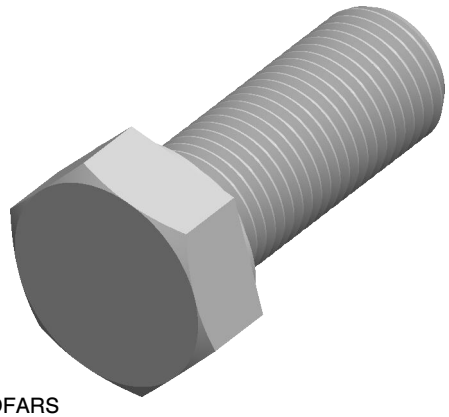

find3dcad

THIRD ANGLE PROJECTION

This file and the related information are provided for reference only and may change without notice. find3dcad does not guarantee the accuracy, completeness, or suitability of this file or the information provided. You are responsible for how you use this file and its information.

This document is the property of find3dcad. The information in it may not be copied, shared, or given to any third party without written permission from find3dcad.

TITLE	DESCRIPTION
Hex Cap Screw	1/2"-20 X 1-1/4" Hex Head Cap Screws Bolts, UNF Fine Thread, Stainless Steel, MS35308 Rev E, DFARS

Sheet Size	PART NUMBER	Rev.	ISSUED
A	IMHHCSB2005-1220X114	01	2026-10-13

SCALE: 2.835

Unless otherwise specified Dimensions are in INCHES