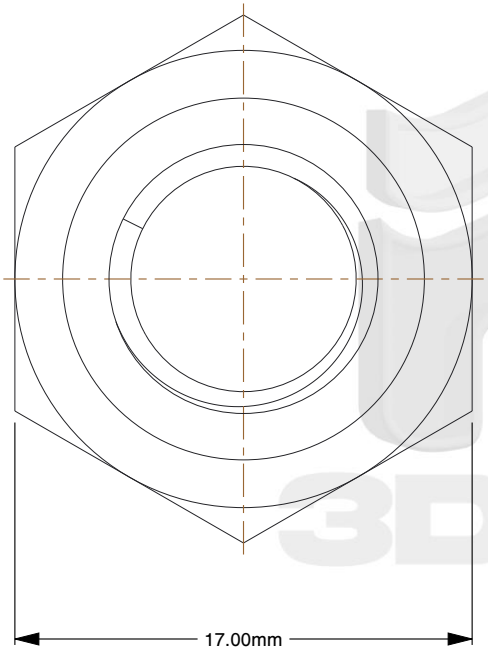

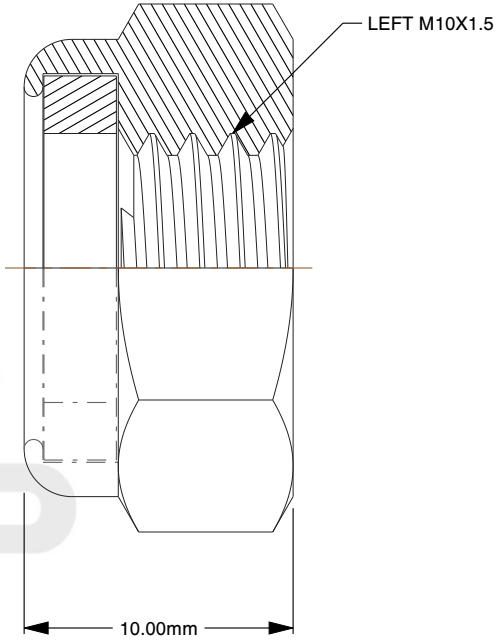

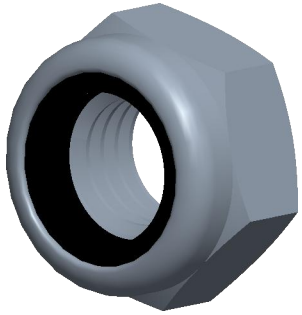

Notes:

1. **Thread Diameter + Pitch:** LEFT M10X1.5
2. **Thread Direction:** Left Hand / Reverse
3. **Type:** Nylon Locking Nut
4. **Material:** A2 Stainless Steel
5. **Finish:** Plain
6. **Drive:** 17mm Wrench
7. **Height:** 10mm
8. **Measurement System:** Metric
9. **Specification:** DIN 985-LH

find3dcad

THIRD ANGLE PROJECTION

This file and the related information are provided for reference only and may change without notice. find3dcad does not guarantee the accuracy, completeness, or suitability of this file or the information provided. You are responsible for how you use this file and its information.

This document is the property of find3dcad. The information in it may not be copied, shared, or given to any third party without written permission from find3dcad.

TITLE	DESCRIPTION
Nylon Locking Nut	Left Hand Nylon Lock Nut Stainless Steel A2 DIN 985-LH

Sheet Size	PART NUMBER	Rev.	ISSUED
A	MDTNLNLH10LEFTSS	01	2026-10-13

SCALE: 3.558	Unless otherwise specified Dimensions are in MILLIMETERS