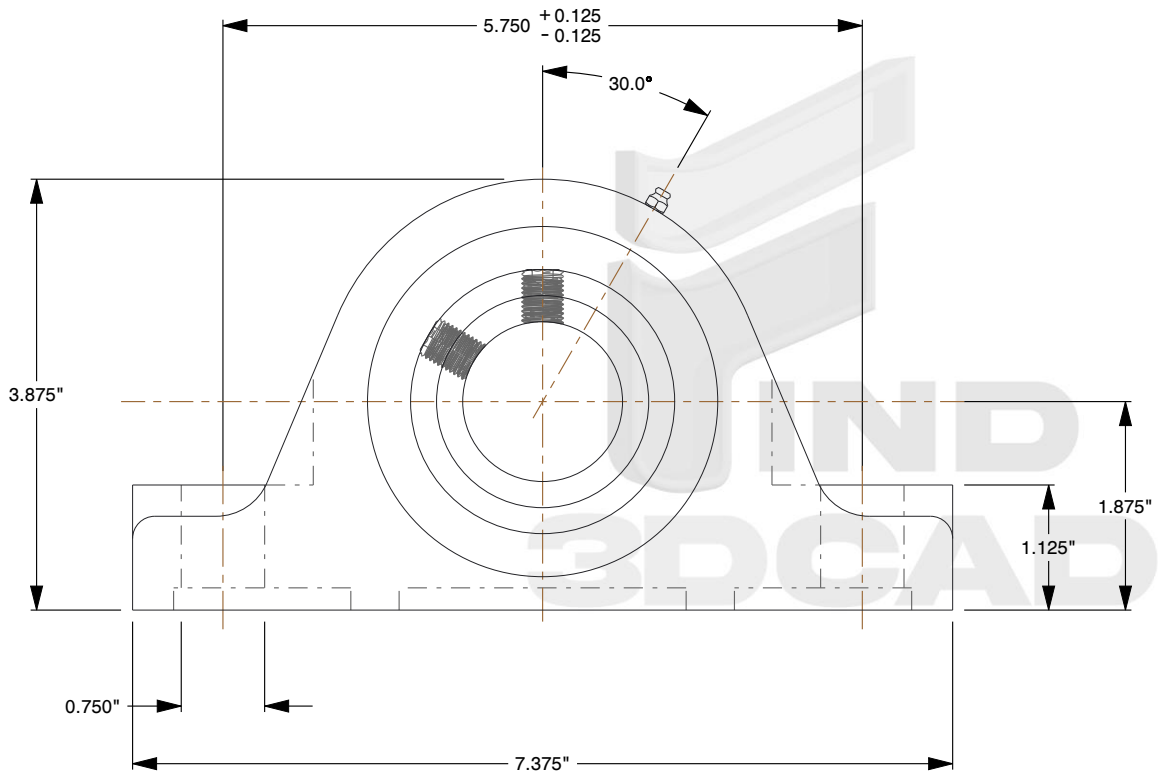

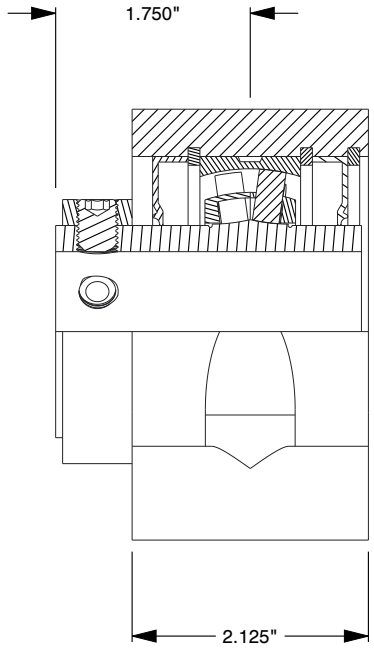

Notes:

1. **Housing type:** Pillow block
2. **Number of bolt holes for fasteners:** 2
3. **Bearing insert:** Spherical roller bearing
4. **Retaining feature, inner ring:** Set screws
5. **Bearing position:** Non-locating
6. **Bore type:** Cylindrical
7. **Material, housing:** Cast iron
8. **Material, bearing:** Bearing steel
9. **Coating:** Without
10. **Bearing housing seal type:** Labyrinth seal
11. **Lubricant:** Grease
12. **Relubrication hole:** With
13. **Grease fitting:** With

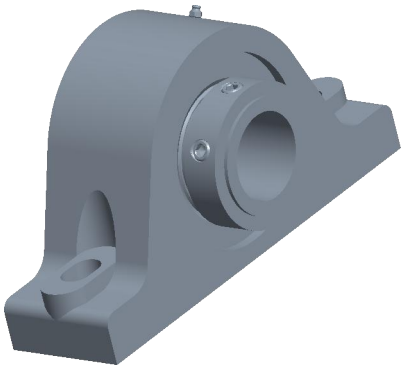

find3dcad

THIRD ANGLE PROJECTION

This file and the related information are provided for reference only and may change without notice. find3dcad does not guarantee the accuracy, completeness, or suitability of this file or the information provided. You are responsible for how you use this file and its information.

This document is the property of find3dcad. The information in it may not be copied, shared, or given to any third party without written permission from find3dcad.

DESCRIPTION

Pillow block ball bearing

TITLE

Sheet Size	PART NUMBER	Rev.	ISSUED
A	P2BE-107-SRB-SLE	01	2026-10-29

SCALE: 0.579

Unless otherwise specified Dimensions are in MILLIMETERS