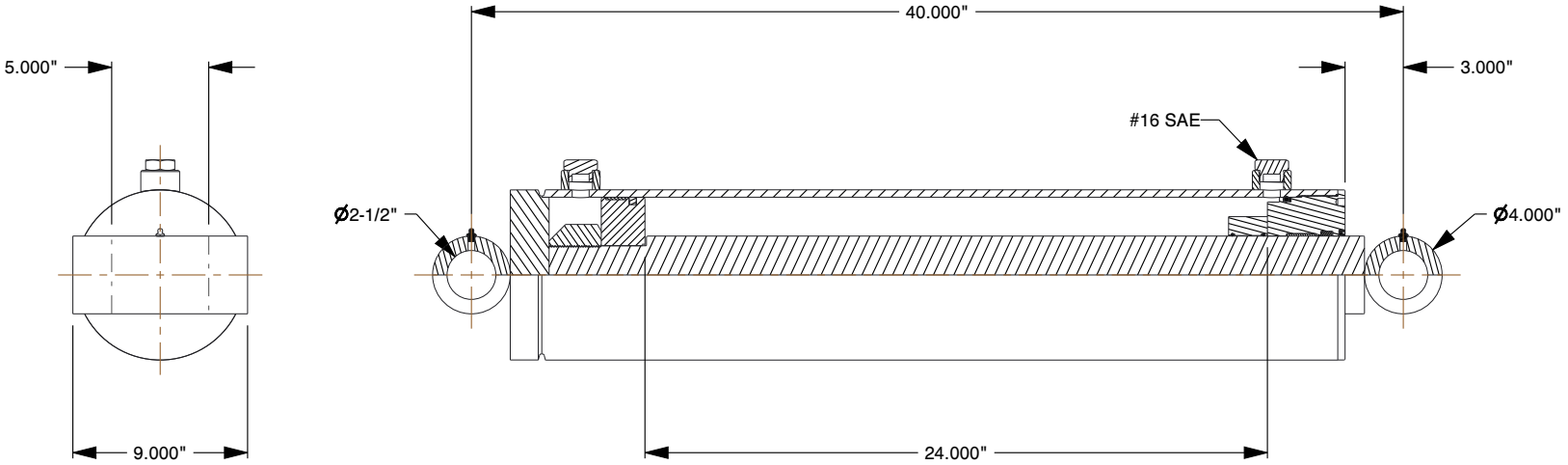

Notes:

- 3000 PSI Maximum Operating Pressure
- 3000 PSI Maximum Peak Spike Pressure
- Welded Construction
- 8" Bore size
- Stroke sizes 24"
- Skived tubing
- Chromed, ground & polished piston rod
- Ductile iron piston & thread-in gland
- Teflon cap seal & wear ring on piston
- Urethane u-cup, metal encased wiper & wear ring on piston
- Crosstube end fittings
- Color is Gloss Black

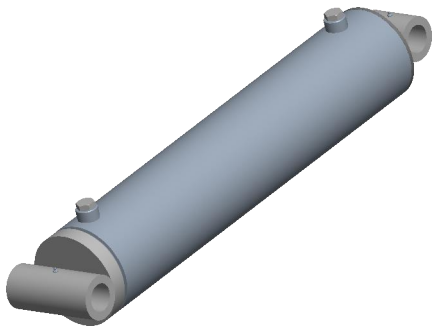

find3dcad	THIRD ANGLE PROJECTION
This file and the related information are provided for reference only and may change without notice. find3dcad does not guarantee the accuracy, completeness, or suitability of this file or the information provided. You are responsible for how you use this file and its information.	This document is the property of find3dcad. The information in it may not be copied, shared, or given to any third party without written permission from find3dcad.
DESCRIPTION Eight Bore Line 3000 psi Welded Cylinder - Double Acting	TITLE WELDED CYLINDER

Sheet Size	PART NUMBER	Rev.	ISSUED
A	68024	01	2026-10-20

SCALE: 0.105	Unless otherwise specified Dimensions are in INCHES