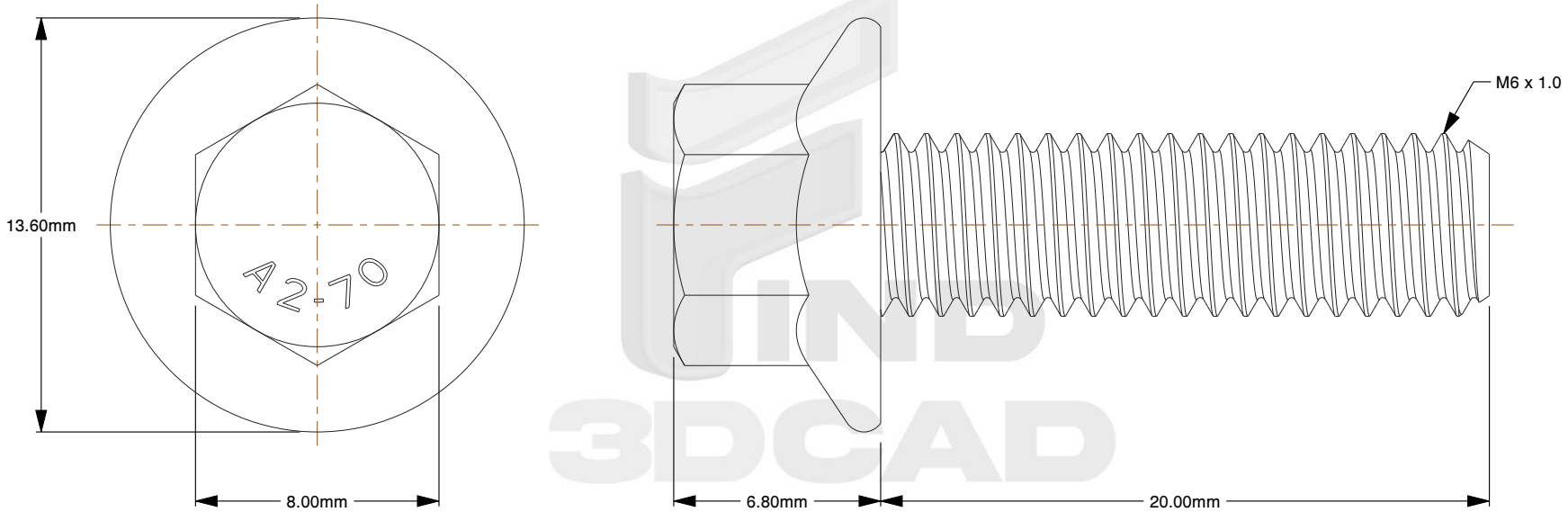

Notes:

1. **Specification:** ISO 4162
2. **Thread Diameter + Pitch:** M6X1.0
3. **Length:** 20mm
4. **Thread Amount:** Full Thread
5. **Threaded Length:** 20mm
6. **Unthreaded Length:** 0mm
7. **Material:** A2-70 Stainless Steel
8. **Finish:** Plain
9. **Flange Type:** Smooth
10. **Flange Width:** 13.6mm
11. **Head Height:** 6.8mm
12. **Drive:** 8mm Wrench
13. **Type Screw/Bolt:** Hex Flange Head
14. **Thread Direction:** Right Hand
15. **Measurement System:** Metric

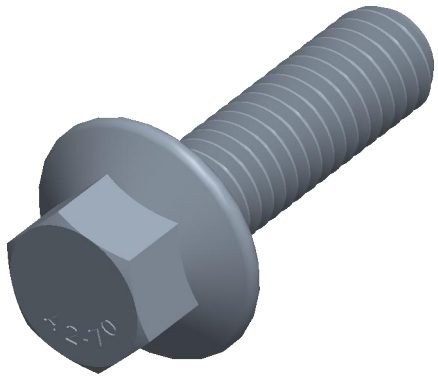

THIRD ANGLE PROJECTION

This file and the related information are provided for reference only and may change without notice. find3dcad does not guarantee the accuracy, completeness, or suitability of this file or the information provided. You are responsible for how you use this file and its information.

This document is the property of find3dcad. The information in it may not be copied, shared, or given to any third party without written permission from find3dcad.

TITLE	PART NUMBER
Hex Flange Bolts	MIHFB6X20SS

PART NUMBER	DESCRIPTION
MIHFB6X20SS	M6X1.0 Flange Bolt A2-70 Stainless ISO 4162 / 8mm Wrench

Sheet Size	Design Code	Drawing No.	Rev.	ISSUED
A	001	10001	01	2026-10-13

SCALE: 4.476

Unless otherwise specified Dimensions are in INCHES