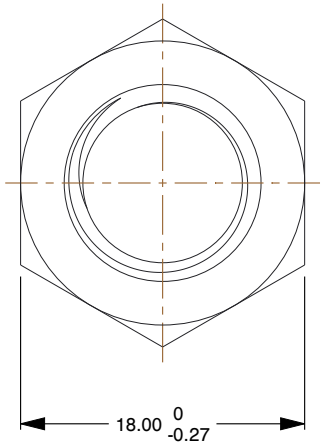

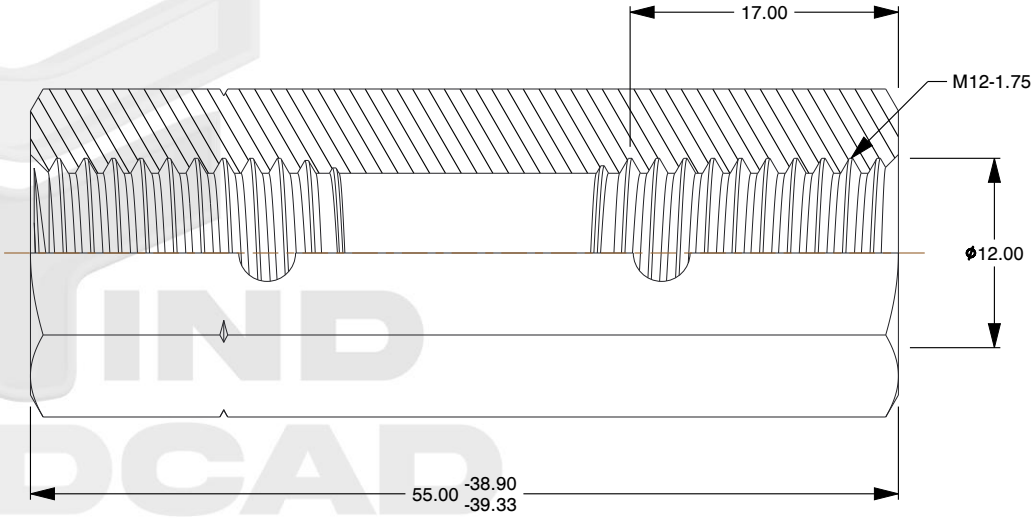

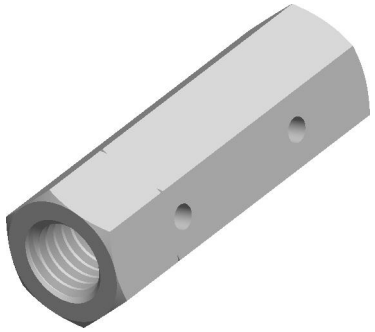

Notes:

1. **Category:** Coupling Nuts
2. **System of Measurement:** Metric
3. **Form and Design:** Double Chamfered and Double Countersunk
4. **Drive Style:** External Hex Drive
5. **Thread Length:** Part Thread
6. **Thread Direction:** Left and Right-Hand Threading
7. **Standards and Specifications:** DIN 1479

find3dcad

THIRD ANGLE PROJECTION

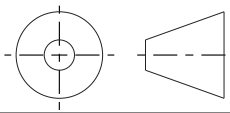

This file and the related information are provided for reference only and may change without notice. find3dcad does not guarantee the accuracy, completeness, or suitability of this file or the information provided. You are responsible for how you use this file and its information.

This document is the property of find3dcad. The information in it may not be copied, shared, or given to any third party without written permission from find3dcad.

DESCRIPTION

M12-1.75 X 55mm DIN 1479, Metric,
Hex Coupling Nuts,
Left and Right Hand Threading, Steel

TITLE

Coupling Nuts

Sheet Size	PART NUMBER	Rev.	ISSUED
A	MDHCN3420-12175	01	2026-10-16

SCALE: 2.088

Unless otherwise specified Dimensions are in METRIC