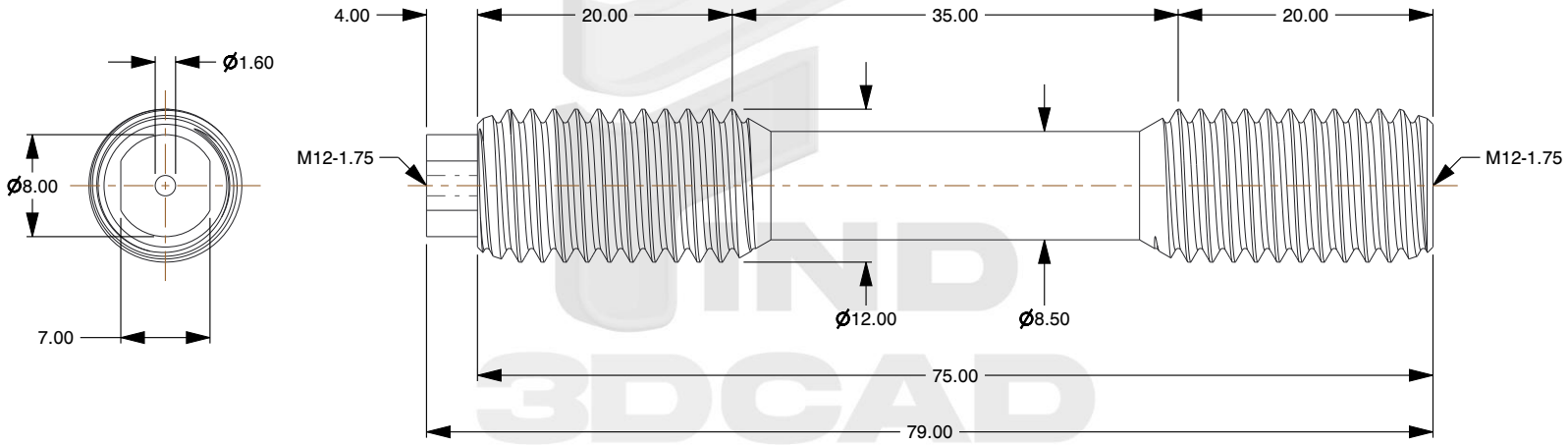

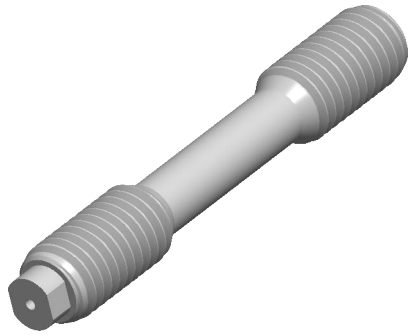

Notes:

1. **Category:** Studs, Double-Ended
2. **System of Measurement:** Metric
3. **Form and Design:** Waisted Shank
4. **Thread Direction:** Right-Hand Thread
5. **Standards and Specifications:** DIN 2510 Type L

find3dcad

THIRD ANGLE PROJECTION

This file and the related information are provided for reference only and may change without notice. find3dcad does not guarantee the accuracy, completeness, or suitability of this file or the information provided. You are responsible for how you use this file and its information.

This document is the property of find3dcad. The information in it may not be copied, shared, or given to any third party without written permission from find3dcad.

TITLE	DESCRIPTION
	M12-1.75 X 75mm DIN 2510 Type L, Metric, Studs, Double-Ended, Waisted Shank, 1.7709 21CrMoV5-7 Steel

Sheet Size	PART NUMBER	Rev.	ISSUED
A	MDWSDS714-12175X75	01	2026-10-16

SCALE: 0.068	Unless otherwise specified Dimensions are in MILLIMETERS