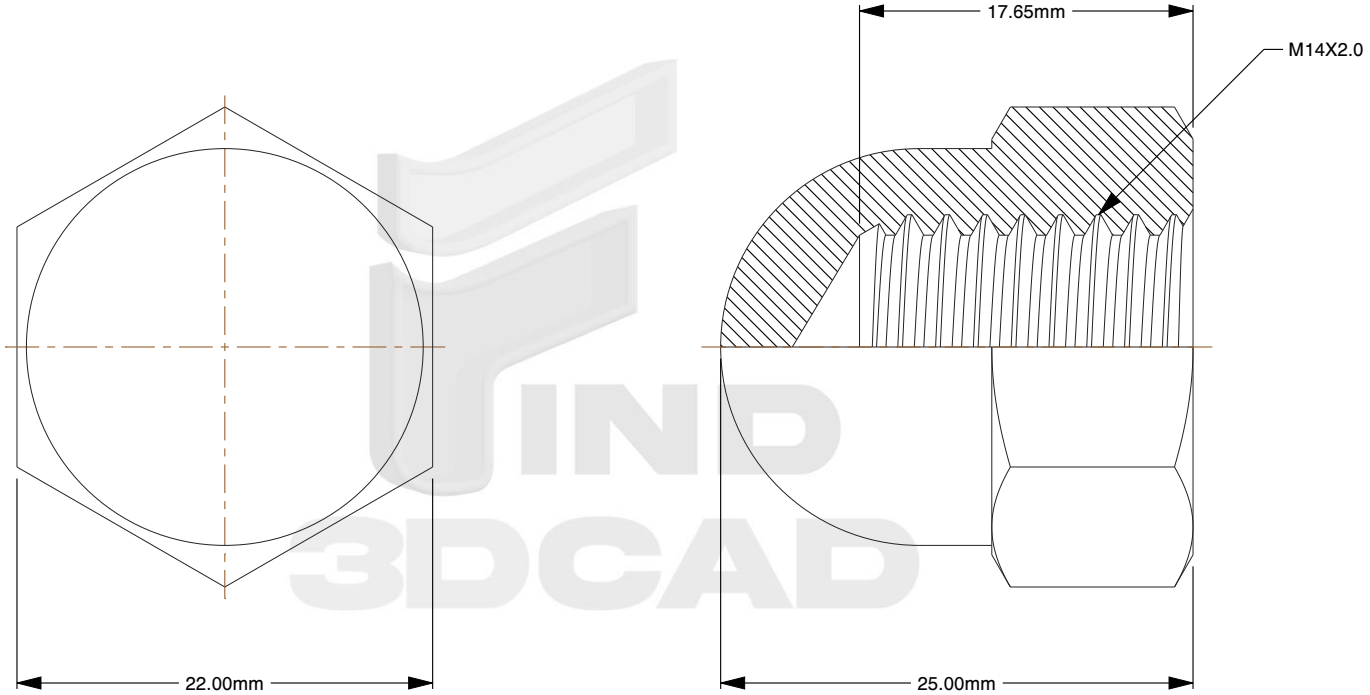

Notes:

1. **Thread Diameter + Pitch:** M14X2.0
2. **Thread Direction:** Right Hand
3. **Type:** Acorn Nut
4. **Material:** Brass
5. **Finish:** Plain
6. **Drive:** 22mm Wrench
7. **Internal Thread Depth:** 17.65mm
8. **Height:** 25mm
9. **Profile:** Normal
10. **Measurement System:** Metric
11. **Specification:** DIN 1587

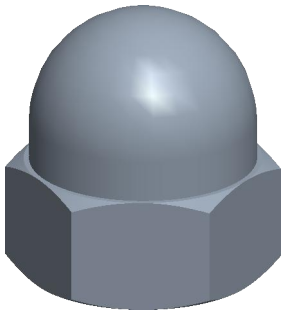

find3dcad

THIRD ANGLE PROJECTION

This file and the related information are provided for reference only and may change without notice. find3dcad does not guarantee the accuracy, completeness, or suitability of this file or the information provided. You are responsible for how you use this file and its information.

This document is the property of find3dcad. The information in it may not be copied, shared, or given to any third party without written permission from find3dcad.

TITLE	DESCRIPTION
Acorn Nut	Acorn Nut, Coarse Brass DIN 1587

Sheet Size	PART NUMBER	Rev.	ISSUED
A	MDAN14BRS	01	2026-10-22

SCALE: 2.500

Unless otherwise specified Dimensions are in MILLIMETERS