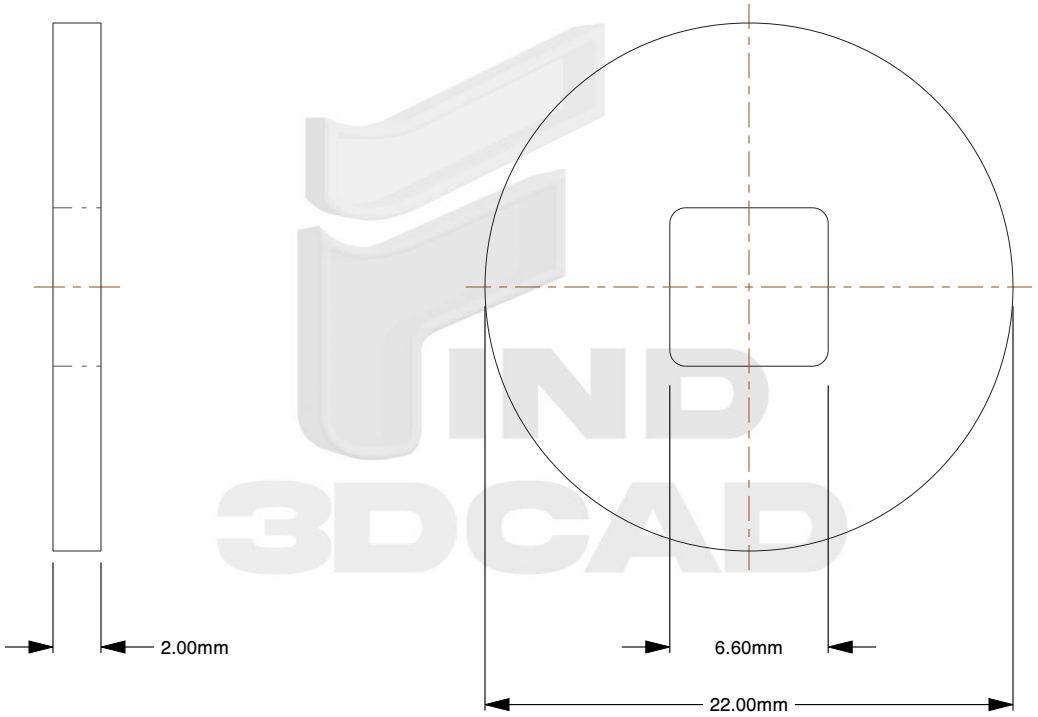

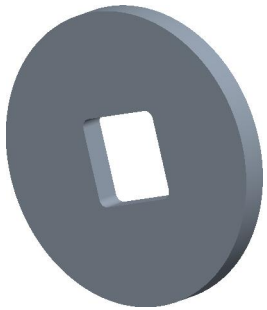

Notes:

1. **For Screw/Bolt Size:** M6
2. **Type:** Square Carriage Washer
3. **Form:** Form V
4. **Material:** Steel
5. **Finish:** Zinc Plated
6. **Thickness:** 2mm
7. **Inner Diameter:** 6.6mm
8. **Outer Diameter:** 22mm
9. **Measurement System:** Metric
10. **Specification:** DIN 440V

find3dcad

THIRD ANGLE PROJECTION

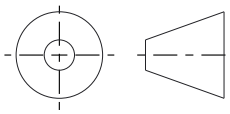

This file and the related information are provided for reference only and may change without notice. find3dcad does not guarantee the accuracy, completeness, or suitability of this file or the information provided. You are responsible for how you use this file and its information.

This document is the property of find3dcad. The information in it may not be copied, shared, or given to any third party without written permission from find3dcad.

TITLE	DESCRIPTION
Fender Washer	Carriage Bolt Fender Washer Zinc Plated, Square Hole DIN 440 Form V

Sheet Size	PART NUMBER	Rev.	ISSUED
A	MDSQCFW6X22CLZ	01	2026-10-16

SCALE: 3.175	Unless otherwise specified Dimensions are in MILLIMETERS