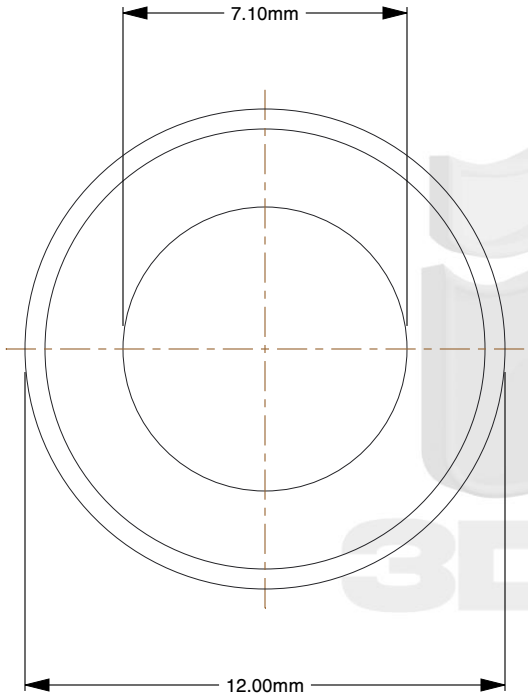

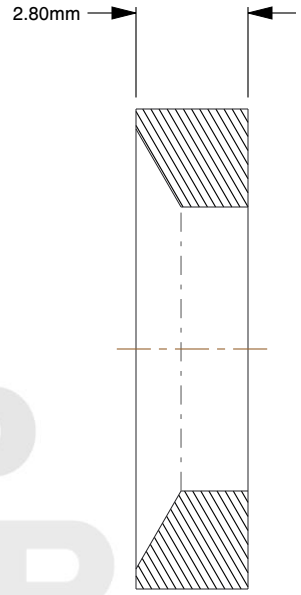

FIND 3DCAD

Notes:

1. **for screw/bolt size:** M6
2. **type:** Spherical Washer
3. **washer form:** Female Form
4. **material:** Case Hardened Steel
5. **finish:** Plain
6. **inner diameter:** 7.1mm
7. **outer diameter:** 12mm
8. **measurement system:** Metric
9. **washer height:** 2.8mm
10. **specification:** DIN 6319

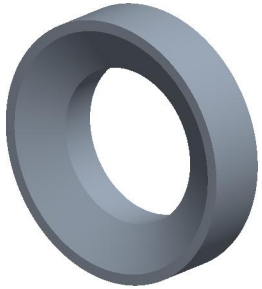

find3dcad

THIRD ANGLE PROJECTION

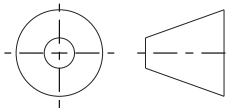

This file and the related information are provided for reference only and may change without notice. find3dcad does not guarantee the accuracy, completeness, or suitability of this file or the information provided. You are responsible for how you use this file and its information.

This document is the property of find3dcad. The information in it may not be copied, shared, or given to any third party without written permission from find3dcad.

TITLE	DESCRIPTION
Spherical Washer	Spherical Washer Female Form Plain Uncoated Steel

Sheet Size	PART NUMBER	Rev.	ISSUED
A	MDSWFM6DPLN	01	2026-10-27

SCALE: 5.292	Unless otherwise specified Dimensions are in MILLIMETERS