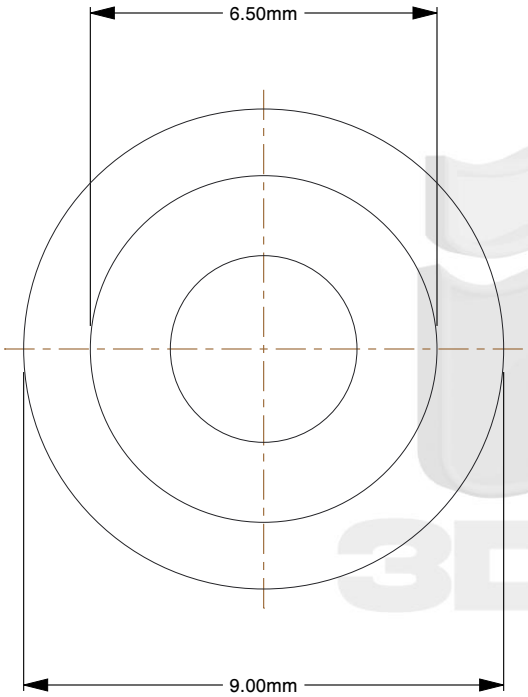

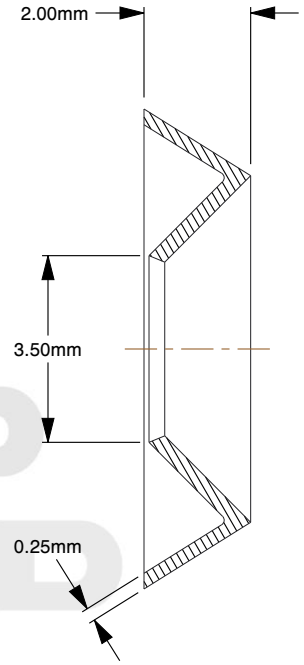

Notes:

1. **for screw/bolt size:** M3
2. **type:** Finish Washer
3. **washer form:** Hollow Stamped
4. **material:** A2 Stainless Steel
5. **finish:** Plain
6. **thickness:** 0.25mm
7. **inner diameter:** 3.5mm
8. **outer diameter:** 9mm
9. **measurement system:** Metric
10. **washer height:** 2mm
11. **cup diameter:** 6.5mm
12. **specification:** NFE 27-619

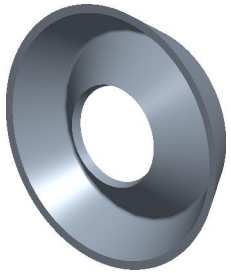

find3dcad

THIRD ANGLE PROJECTION

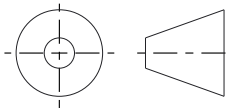

This file and the related information are provided for reference only and may change without notice. find3dcad does not guarantee the accuracy, completeness, or suitability of this file or the information provided. You are responsible for how you use this file and its information.

This document is the property of find3dcad. The information in it may not be copied, shared, or given to any third party without written permission from find3dcad.

TITLE	DESCRIPTION
Finish Washer	Stamped Finish Washer Stainless steel NFE 27-619 Hollow

Sheet Size	PART NUMBER	Rev.	ISSUED
A	MNFWHF3STMPSS	01	2026-10-20

SCALE: 7.056	Unless otherwise specified Dimensions are in MILLIMETERS