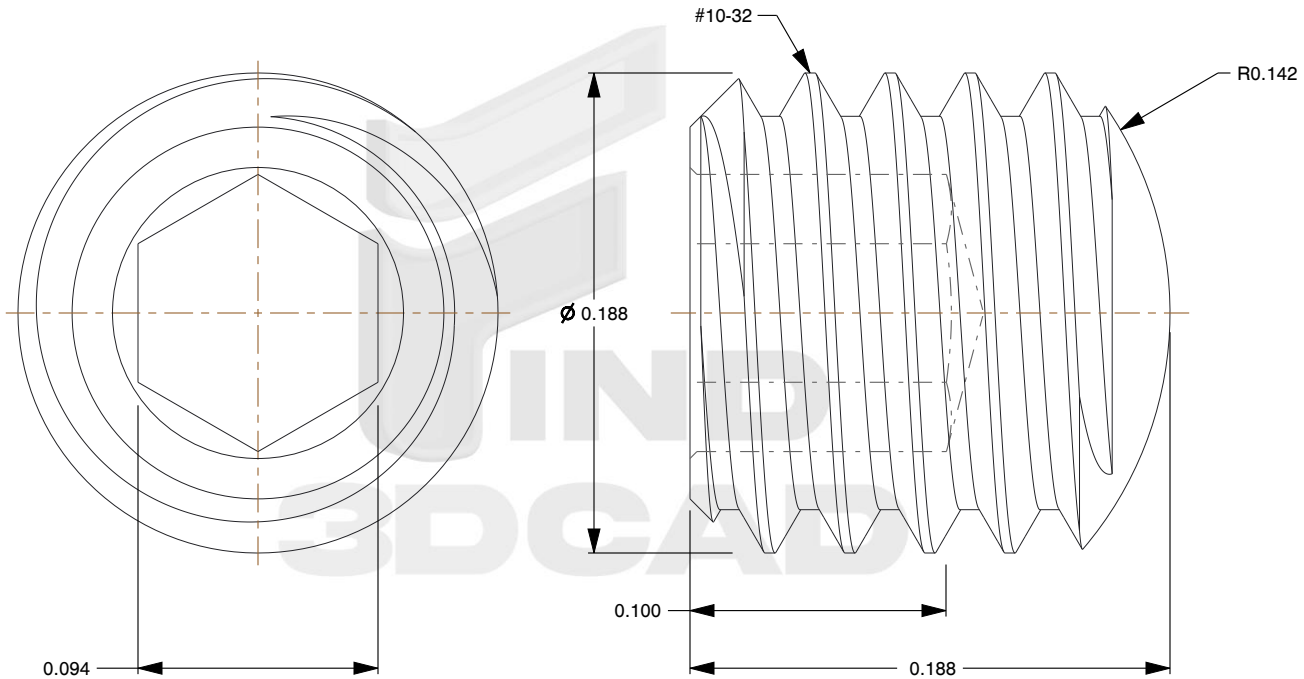

Notes:

1. **Category:** Set Screws
2. **System of Measurement:** Inch
3. **Head Style:** Headless
4. **Drive Style:** Hex Socket Drive
5. **Pitch:** UNF Fine Thread
6. **Thread Length:** Full Thread
7. **Thread Direction:** Right-Hand Thread
8. **Point:** Oval Point
9. **Material:** Steel
10. **Material Grade:** Alloy Steel
11. **Material Processes:** Heat Treated
12. **Coating:** Uncoated
13. **Hardness Rating:** Rockwell C45-C53
14. **Origin:** Origin Undefined
15. **Standards and Specifications:** ASME B18.3

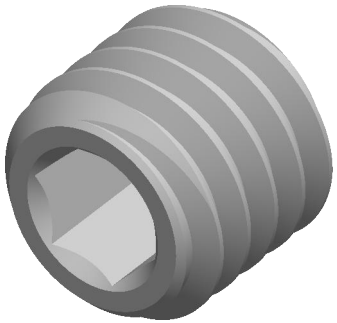

find3dcad

THIRD ANGLE PROJECTION

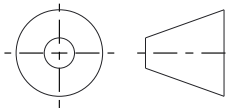

This file and the related information are provided for reference only and may change without notice. find3dcad does not guarantee the accuracy, completeness, or suitability of this file or the information provided. You are responsible for how you use this file and its information.

This document is the property of find3dcad. The information in it may not be copied, shared, or given to any third party without written permission from find3dcad.

TITLE	DESCRIPTION
Set Screw	#10-32 X 3/16" Hex Socket Set Screws, Oval Point, UNF Fine Thread, Alloy Steel

Sheet Size	PART NUMBER	Rev.	ISSUED
A	IAOSSS031-1032X316	01	2026-10-16

SCALE: 13.333 | Unless otherwise specified Dimensions are in INCHES