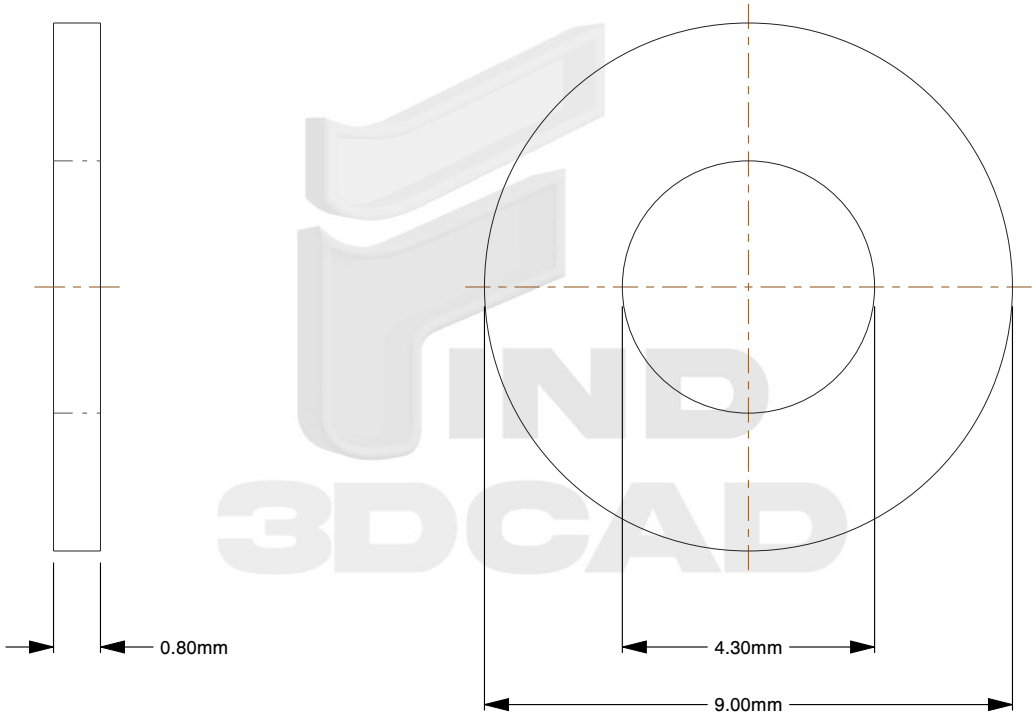

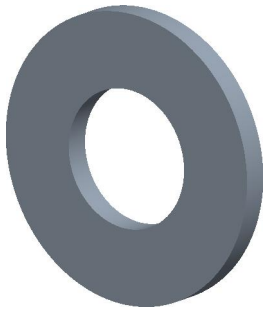

Notes:

1. **For Screw/Bolt Size:** M4
2. **Type:** Flat Washer
3. **Material:** HV 300 Steel
4. **Finish:** Plain
5. **Thickness:** 0.8mm
6. **Inner Diameter:** 4.3mm
7. **Outer Diameter:** 9mm
8. **Measurement System:** Metric
9. **Specification:** ISO 7089

find3dcad

THIRD ANGLE PROJECTION

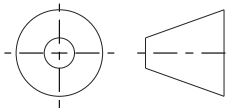

This file and the related information are provided for reference only and may change without notice. find3dcad does not guarantee the accuracy, completeness, or suitability of this file or the information provided. You are responsible for how you use this file and its information.

This document is the property of find3dcad. The information in it may not be copied, shared, or given to any third party without written permission from find3dcad.

TITLE	DESCRIPTION
Flat Washer	ISO Flat Washer Hardened Steel HV-300 ISO 7089 Square Edge

Sheet Size	PART NUMBER	Rev.	ISSUED
A	MIFW-ISO7089-4-PLN	01	2026-10-20

SCALE: 7.761	Unless otherwise specified Dimensions are in MILLIMETERS