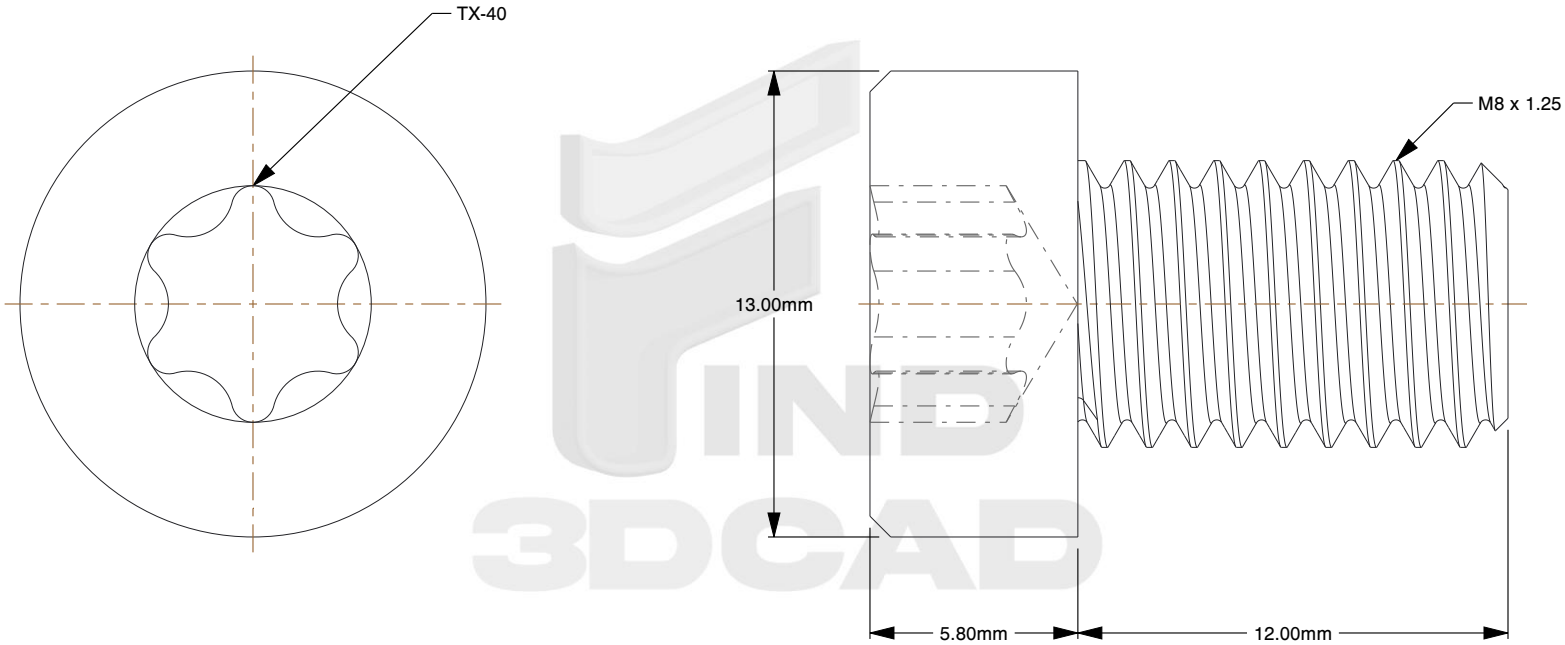

Notes:

1. **Specification:** DIN 7984
2. **Thread Diameter + Pitch:** M8X1.25
3. **Length:** 12mm
4. **Thread Amount:** Full Thread
5. **Threaded Length:** 12mm
6. **Unthreaded Length:** 0mm
7. **Material:** Class 8.8 Steel
8. **Finish:** Zinc Plated
9. **Head Diameter:** 13mm
10. **Head Height:** 5.8mm
11. **Drive:** T40 Torx Socket
12. **Type Screw/Bolt:** Socket Low Head
13. **Thread Direction:** Right Hand
14. **Measurement System:** Metric

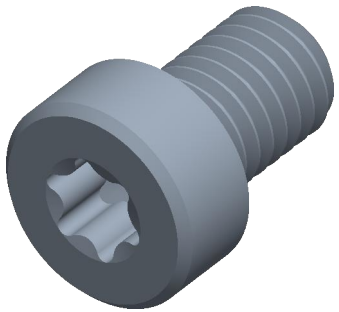

find3dcad

THIRD ANGLE PROJECTION

This file and the related information are provided for reference only and may change without notice. find3dcad does not guarantee the accuracy, completeness, or suitability of this file or the information provided. You are responsible for how you use this file and its information.

This document is the property of find3dcad. The information in it may not be copied, shared, or given to any third party without written permission from find3dcad.

TITLE	DESCRIPTION
Low Socket Head Screws	M8 Low Torx Socket Steel Class 8.8 Zinc DIN 7984 TX-40

Sheet Size	PART NUMBER	Rev.	ISSUED
A	MSTLSHS8X12TXLOWCLZ	01	2026-10-19

SCALE: 4.742	Unless otherwise specified Dimensions are in MILLIMETERS