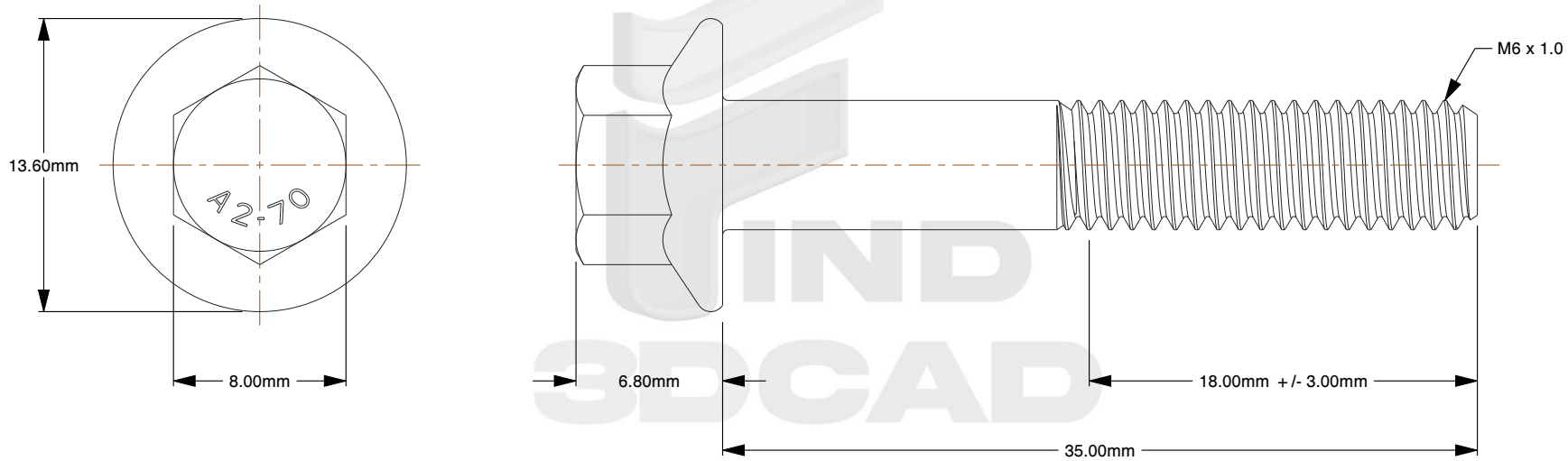

Notes:

1. **Specification:** ISO 4162
2. **Thread Diameter + Pitch:** M6X1.0
3. **Length:** 35mm
4. **Thread Amount:** Partial Thread
5. **Threaded Length:** 18mm +/- 3mm
6. **Unthreaded Length:** 17mm +/- 3mm
7. **Material:** A2-70 Stainless Steel
8. **Finish:** Plain
9. **Flange Type:** Smooth
10. **Flange Width:** 13.6mm
11. **Head Height:** 6.8mm
12. **Drive:** 8mm Wrench
13. **Type Screw/Bolt:** Hex Flange Head
14. **Thread Direction:** Right Hand
15. **Measurement System:** Metric

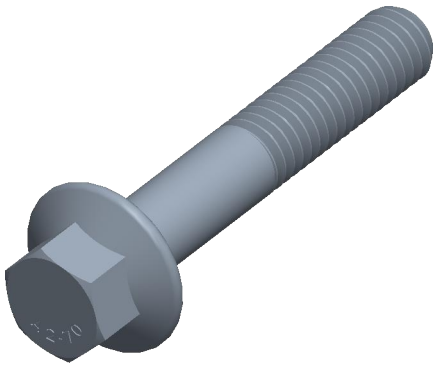

			THIRD ANGLE PROJECTION	
This file and the related information are provided for reference only and may change without notice. find3dcad does not guarantee the accuracy, completeness, or suitability of this file or the information provided. You are responsible for how you use this file and its information.			This document is the property of find3dcad. The information in it may not be copied, shared, or given to any third party without written permission from find3dcad.	
TITLE Hex Flange Bolts			PART NUMBER MIHFB6X35SS	
PART NUMBER MIHFB6X35SS		DESCRIPTION M6X1.0 Flange Bolt A2-70 Stainless ISO 4162 / 8mm Wrench		
Sheet Size	Design Code	Drawing No.	Rev.	ISSUED
A	001	10001	01	2026-10-13
SCALE: 3.160		Unless otherwise specified Dimensions are in INCHES		