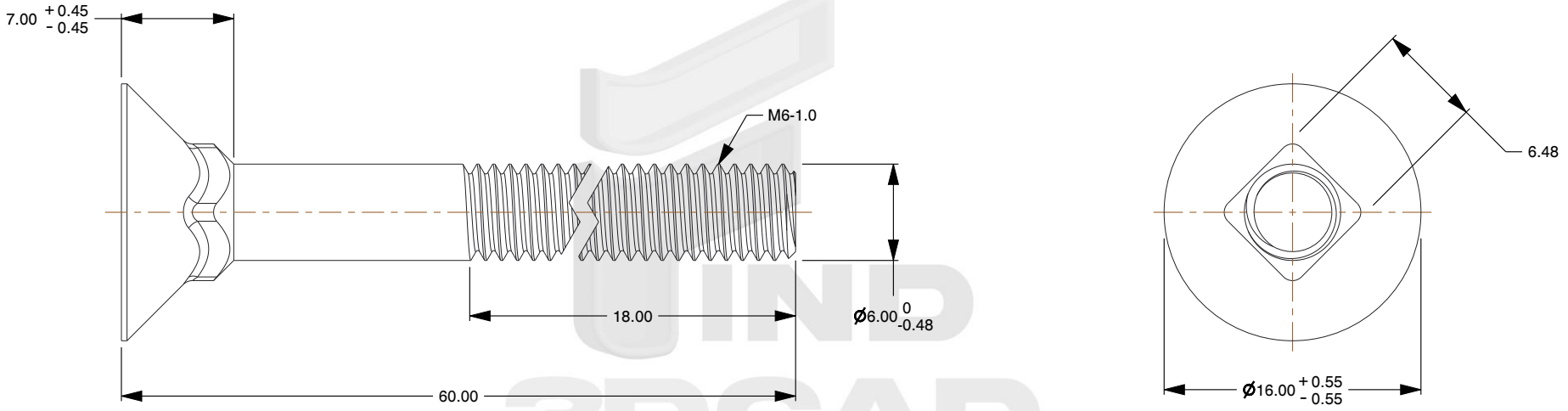

Notes:

1. **Category:** Carriage Bolts
2. **System of Measurement:** Metric
3. **Head Style:** Flat Head
4. **Head Style Detail:** Square Neck
5. **Thread Length:** Standard Thread Length
6. **Thread Direction:** Right-Hand Thread

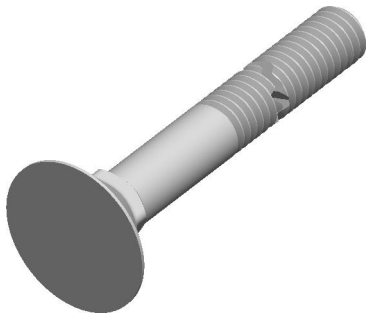

find3dcad

THIRD ANGLE PROJECTION

This file and the related information are provided for reference only and may change without notice. find3dcad does not guarantee the accuracy, completeness, or suitability of this file or the information provided. You are responsible for how you use this file and its information.

This document is the property of find3dcad. The information in it may not be copied, shared, or given to any third party without written permission from find3dcad.

TITLE	DESCRIPTION
Carriage Bolts	M6-1.0 X 60mm DIN 605, Metric, Carriage Bolts, Flat Head, Square Neck, Class 4.6 Steel

Sheet Size	PART NUMBER	Rev.	ISSUED
A	MDFHSQB107-610X60	01	2026-10-13

SCALE: 2.502	Unless otherwise specified Dimensions are in MILLIMETERS