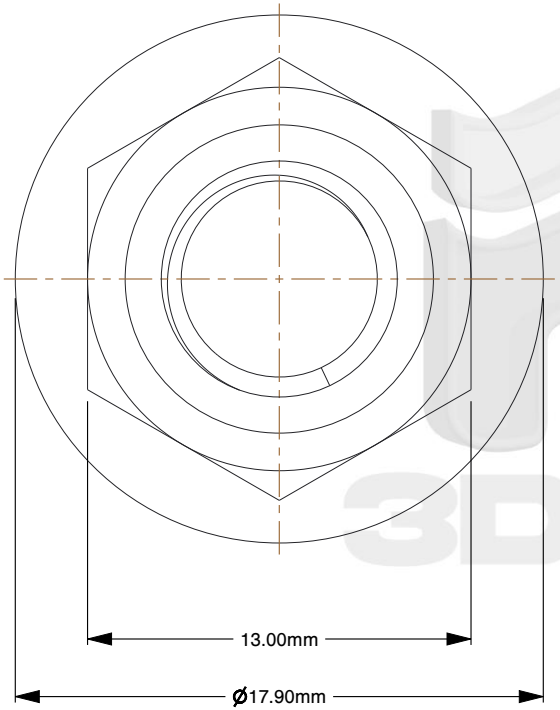

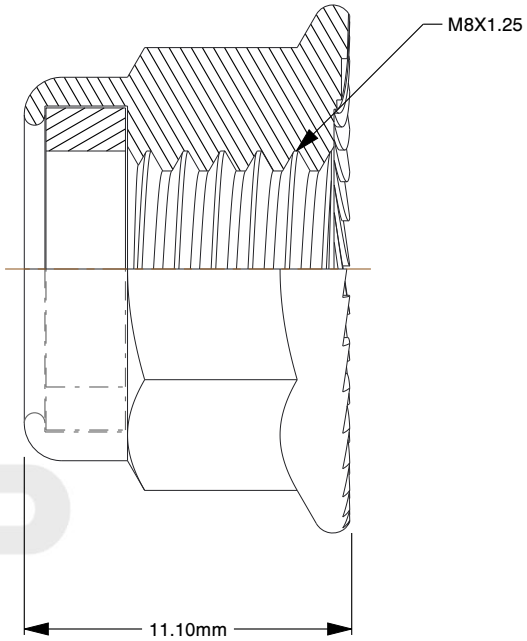

Notes:

1. **Thread Diameter + Pitch:** M8X1.25
2. **Thread Direction:** Right Hand
3. **Type:** Nylon Flange Nut
4. **Material:** A2-70 Stainless Steel
5. **Finish:** Plain
6. **Drive:** 13mm Wrench
7. **Height:** 11.1mm
8. **Flange Width:** 17.9mm
9. **Flange Type:** Serrated
10. **Measurement System:** Metric
11. **Specification:** DIN 6926

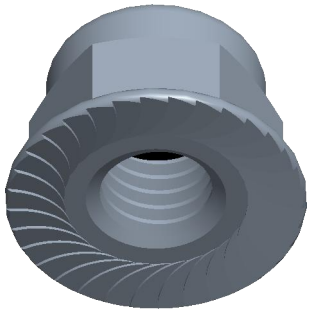

find3dcad

THIRD ANGLE PROJECTION

This file and the related information are provided for reference only and may change without notice. find3dcad does not guarantee the accuracy, completeness, or suitability of this file or the information provided. You are responsible for how you use this file and its information.

This document is the property of find3dcad. The information in it may not be copied, shared, or given to any third party without written permission from find3dcad.

TITLE	DESCRIPTION
Flange Nuts	Coarse DIN 6926 Nylon Flange Stainless Steel A2 Serrated Bottom Nut

Sheet Size	PART NUMBER	Rev.	ISSUED
A	MDSNFL8SRSS	01	2026-10-16

SCALE: 3.902	Unless otherwise specified Dimensions are in MILLIMETERS