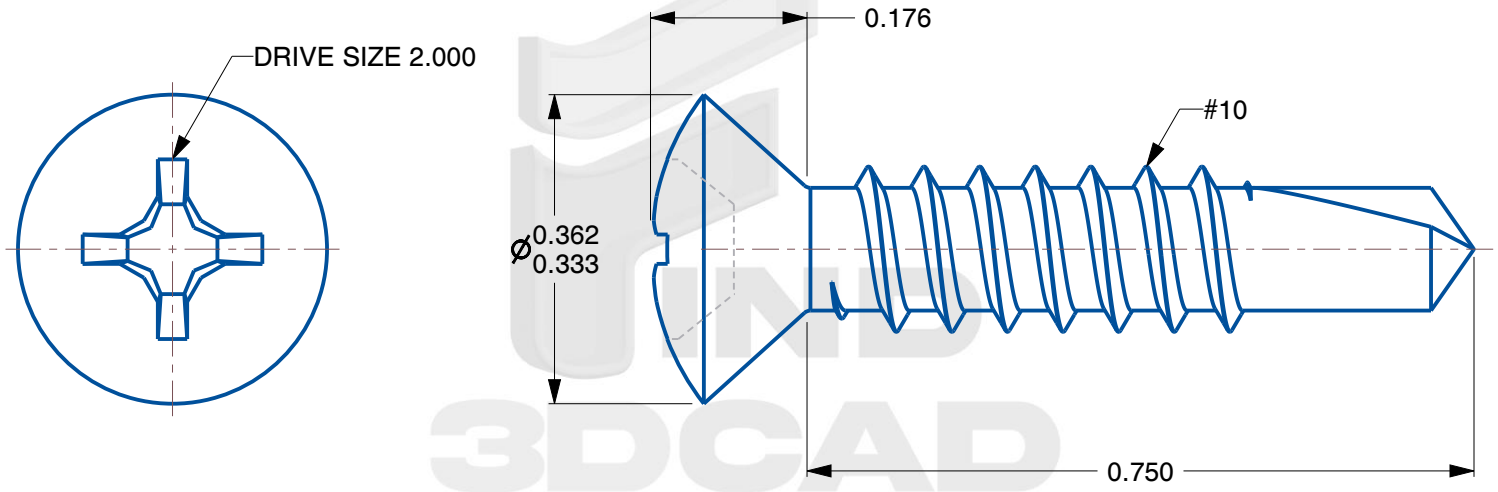

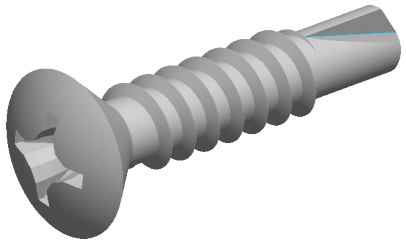

find3dcad

THIRD ANGLE PROJECTION

This file and the related information are provided for reference only and may change without notice. TOREC Screws does not guarantee the accuracy, completeness, or suitability of this file or the information provided. You are responsible for how you use this file and its information.

This document is the property of TOREC Screws. The information in it may not be copied, shared, or given to any third party without written permission from TOREC Screws.

DESCRIPTION

TEKS Self-Drilling Fasteners 10-16 x 1''

TITLE

SELF-DRILLING SCREWS

Sheet Size	PART NUMBER	Rev.	ISSUED
A	1544000	01	2026-10-22

SCALE: 4.632

Unless otherwise specified Dimensions are in INCHES

Notes: