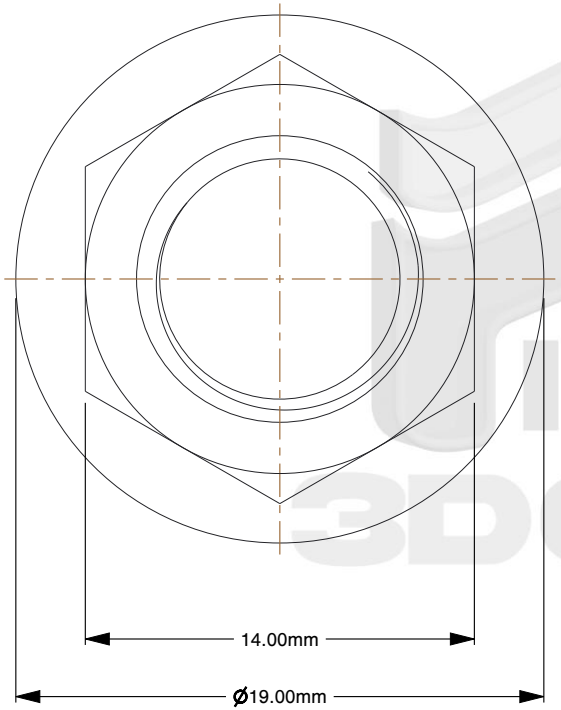

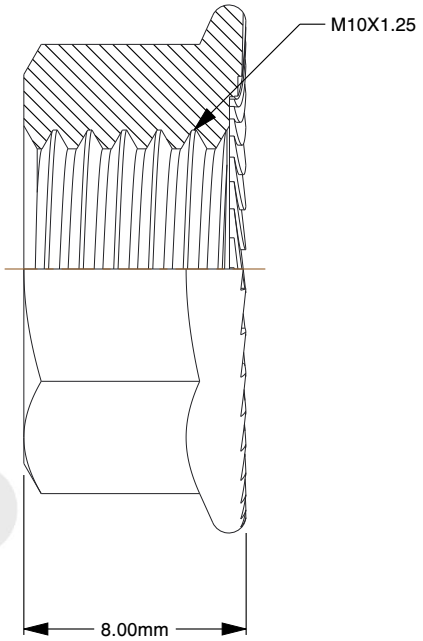

Notes:

1. **Thread Diameter + Pitch:** M10X1.25
2. **Thread Direction:** Right Hand
3. **Type:** Flange Nut
4. **Material:** A2 Stainless Steel
5. **Finish:** Plain
6. **Drive:** 14mm Wrench
7. **Height:** 8mm
8. **Flange Width:** 19mm
9. **Flange Type:** Serrated
10. **Measurement System:** Metric
11. **Specification:** JIS B1190

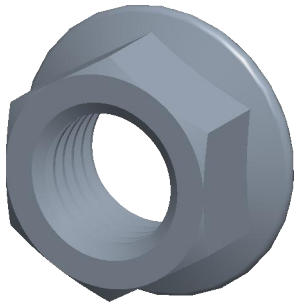

find3dcad

THIRD ANGLE PROJECTION

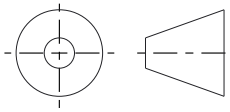

This file and the related information are provided for reference only and may change without notice. find3dcad does not guarantee the accuracy, completeness, or suitability of this file or the information provided. You are responsible for how you use this file and its information.

This document is the property of find3dcad. The information in it may not be copied, shared, or given to any third party without written permission from find3dcad.

TITLE	DESCRIPTION
Flange Nuts	M10X1.25 Serrated Flange Nut Stainless Steel A2 Fine Thread 14mm Wrench

Sheet Size	PART NUMBER	Rev.	ISSUED
A	MJSRFN10X1-25X14SS	01	2026-10-27

SCALE: 3.676	Unless otherwise specified Dimensions are in MILLIMETERS