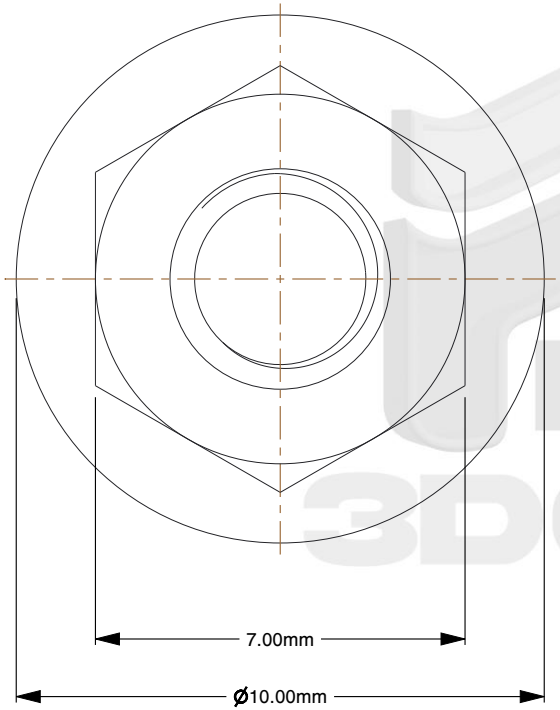

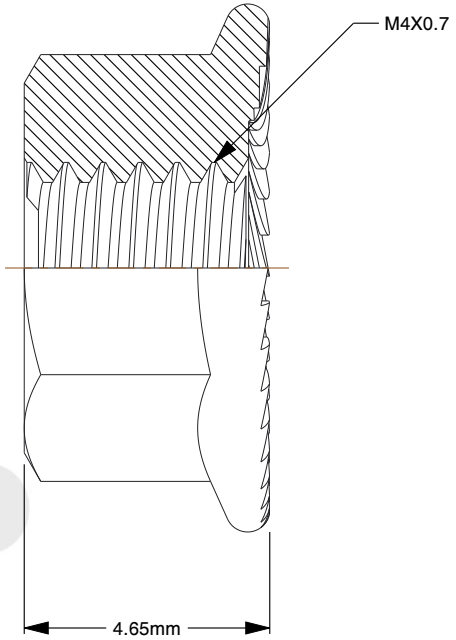

Notes:

1. **Thread Diameter + Pitch:** M4X0.7
2. **Thread Direction:** Right Hand
3. **Type:** Flange Nut
4. **Material:** Class 8 Steel
5. **Finish:** Yellow Zinc Plated
6. **Drive:** 7mm Wrench
7. **Height:** 4.65mm
8. **Flange Width:** 10mm
9. **Flange Type:** Serrated
10. **Measurement System:** Metric
11. **Specification:** DIN 6923

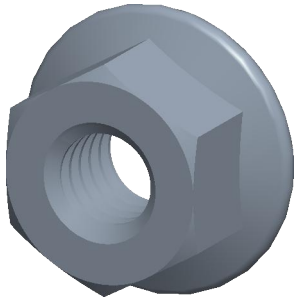

find3dcad

THIRD ANGLE PROJECTION

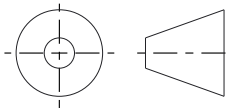

This file and the related information are provided for reference only and may change without notice. find3dcad does not guarantee the accuracy, completeness, or suitability of this file or the information provided. You are responsible for how you use this file and its information.

This document is the property of find3dcad. The information in it may not be copied, shared, or given to any third party without written permission from find3dcad.

TITLE	DESCRIPTION
Flange Nut	Serrated Flange Nut DIN 6923 Steel Class 8 Zinc Plated Coarse Thread

Sheet Size	PART NUMBER	Rev.	ISSUED
A	MDSRFN4YLW	01	2026-10-20

SCALE: 6.985	Unless otherwise specified Dimensions are in MILLIMETERS