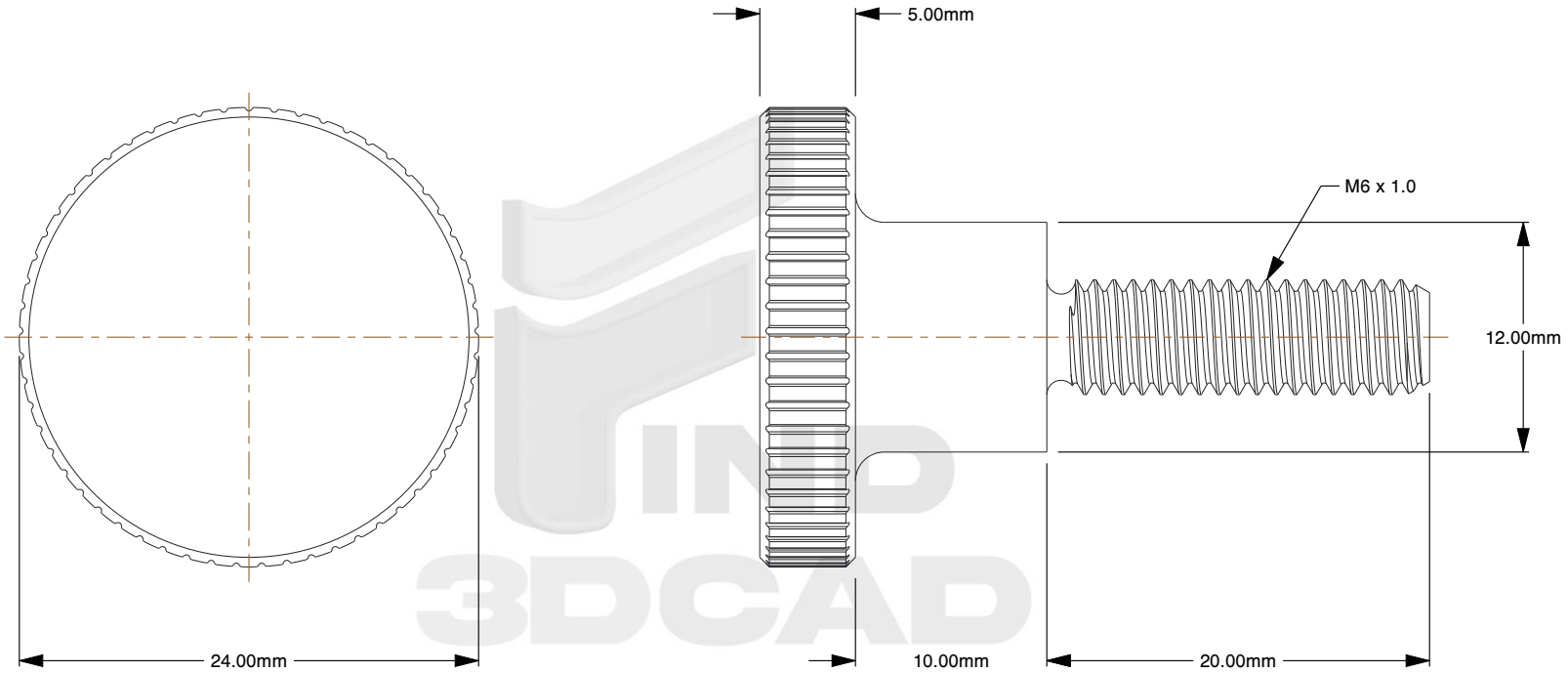

Notes:

1. **Specification:** DIN 464
2. **Thread Diameter + Pitch:** M6X1.0
3. **Length:** 20mm
4. **Thread Amount:** Full Thread
5. **Material:** Stainless Steel
6. **Finish:** Plain
7. **Collar Height:** 10.0mm
8. **Collar Diameter:** 12mm
9. **Head Diameter:** 24mm
10. **Head Height:** 5mm
11. **Type Screw/Bolt:** Thumb Bolt/Screw
12. **Thread Direction:** Right Hand
13. **Measurement System:** Metric
14. **Sulfur (S):** less than or equal to 0.03%

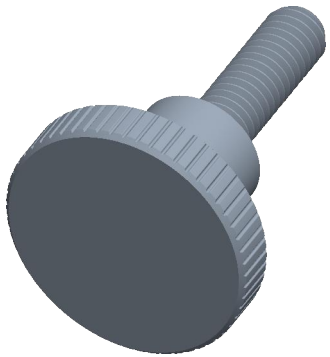

find3dcad

THIRD ANGLE PROJECTION

This file and the related information are provided for reference only and may change without notice. TOREC Screws does not guarantee the accuracy, completeness, or suitability of this file or the information provided. You are responsible for how you use this file and its information.

This document is the property of TOREC Screws. The information in it may not be copied, shared, or given to any third party without written permission from TOREC Screws.

DESCRIPTION

M6X1.0 Thumb Screw
DIN 464 Knurled Head
A2 Stainless Steel, High Type

TITLE

Thumb Screws

Sheet Size	PART NUMBER	Rev.	ISSUED
A	MDKHTS6X20SS	01	2026-10-13

SCALE: 2.593

Unless otherwise specified Dimensions are in MILLIMETERS