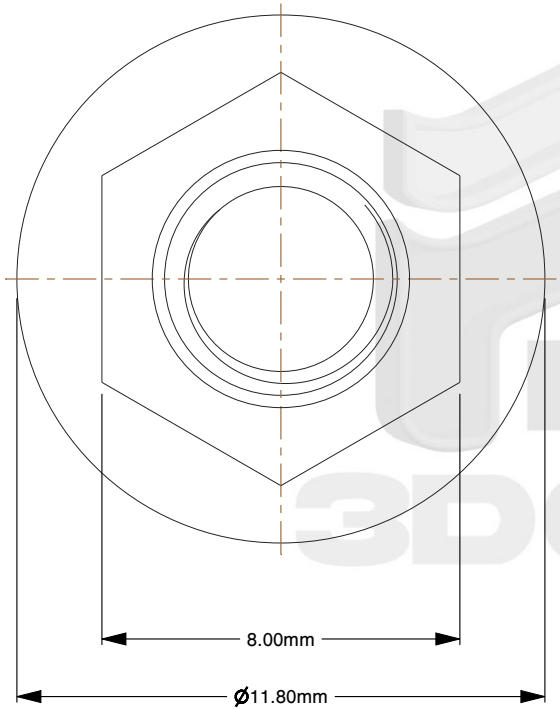

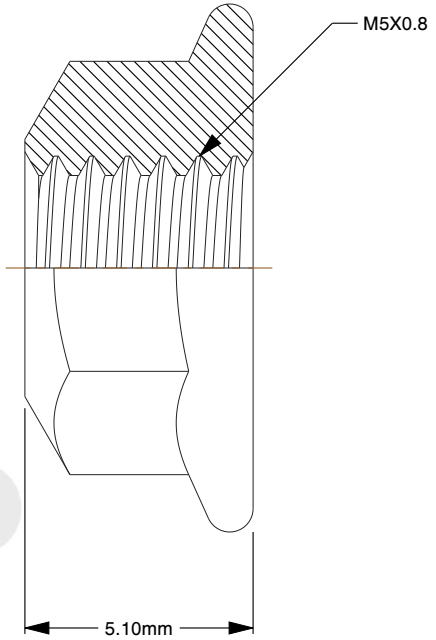

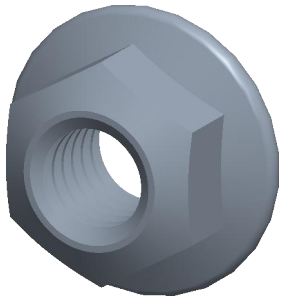

Notes:

1. **Thread Diameter + Pitch:** M5X0.8
2. **Thread Direction:** Right Hand
3. **Type:** Conical Lock Flange Nut
4. **Material:** Class 8 Steel
5. **Finish:** Zinc Plated
6. **Drive:** 8mm Wrench
7. **Height:** 5.1mm
8. **Flange Width:** 11.8mm
9. **Flange Type:** Smooth
10. **Measurement System:** Metric
11. **Specification:** DIN 6927

find3dcad	THIRD ANGLE PROJECTION
This file and the related information are provided for reference only and may change without notice. find3dcad does not guarantee the accuracy, completeness, or suitability of this file or the information provided. You are responsible for how you use this file and its information.	This document is the property of find3dcad. The information in it may not be copied, shared, or given to any third party without written permission from find3dcad.
TITLE Conical Flange Nut	DESCRIPTION Top Lock Flange Nut DIN 6927 Steel Class 8 Coarse Thread

Sheet Size	PART NUMBER	Rev.	ISSUED
A	MDCLFN5CLZ	01	2026-10-27
SCALE: 5.919	Unless otherwise specified Dimensions are in MILLIMETERS		