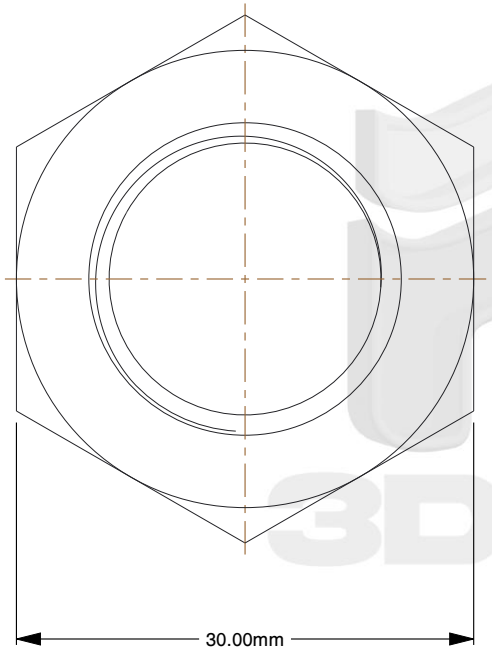

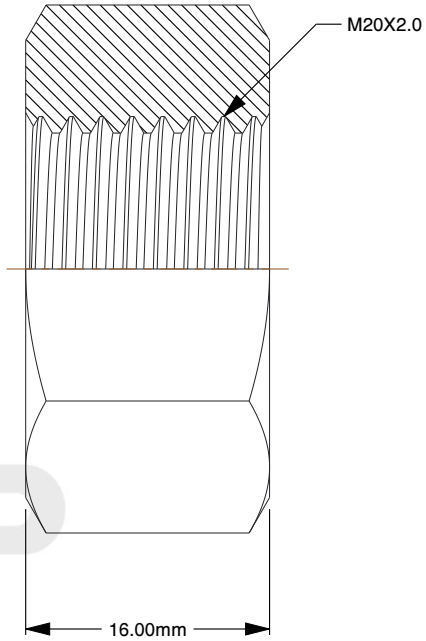

Notes:

1. **Diameter-Thread Size:** M20-2.00
2. **Finish:** Plain
3. **Grade:** Class 8
4. **Material:** Steel
5. **Measurement Type:** Metric
6. **Package Quantity:** 15
7. **Package Size:** Package
8. **Product Type:** Hex Nuts
9. **Specifications:** DIN 934
10. **Thread:** Fine

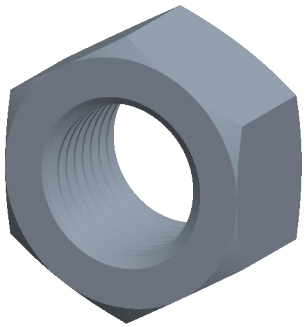

find3dcad

THIRD ANGLE PROJECTION

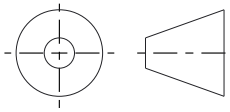

This file and the related information are provided for reference only and may change without notice. find3dcad does not guarantee the accuracy, completeness, or suitability of this file or the information provided. You are responsible for how you use this file and its information.

This document is the property of find3dcad. The information in it may not be copied, shared, or given to any third party without written permission from find3dcad.

TITLE	DESCRIPTION
Hex Nut	M20-2.00 Hex Nut, Class 8 DIN 934 Plain

Sheet Size	PART NUMBER	Rev.	ISSUED
A	BB-557216-P	01	2026-10-20

SCALE: 2.016	Unless otherwise specified Dimensions are in MILLIMETERS