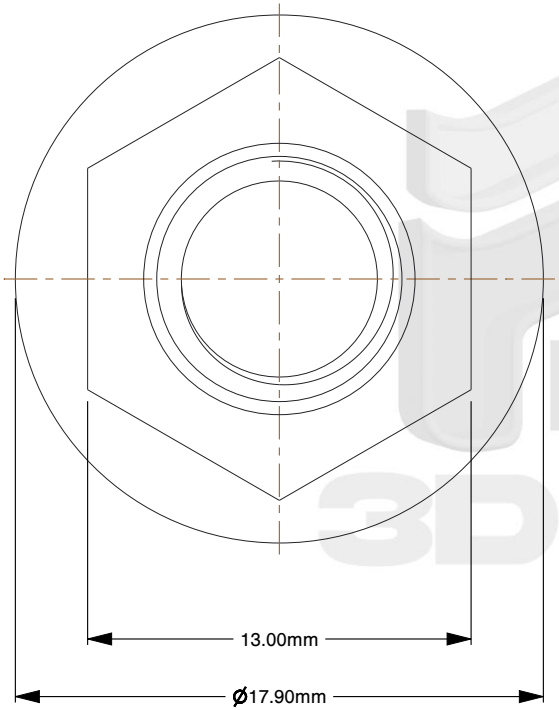

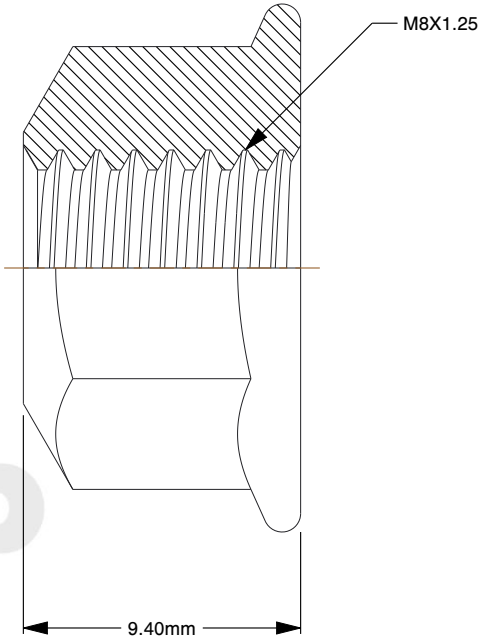

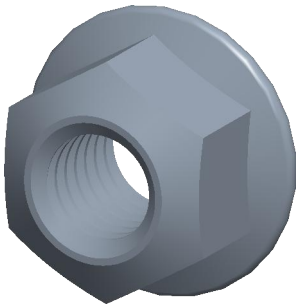

Notes:

1. **Thread Diameter + Pitch:** M8X1.25
2. **Type Nut:** Conical Lock Flange Nut
3. **Material:** Class 8 Steel
4. **Finish:** Copper
5. **Drive:** 13mm Wrench
6. **Flange Type:** Smooth
7. **Specification:** DIN 6927
8. **Thread Direction:** Right Hand
9. **Measurement System:** Metric

find3dcad	THIRD ANGLE PROJECTION
This file and the related information are provided for reference only and may change without notice. find3dcad does not guarantee the accuracy, completeness, or suitability of this file or the information provided. You are responsible for how you use this file and its information.	This document is the property of find3dcad. The information in it may not be copied, shared, or given to any third party without written permission from find3dcad.
TITLE Conical Flange Nut	DESCRIPTION Top Lock Flange Nut DIN 6927 Steel Class 8 Copper Exhaust Coarse Thread

Sheet Size	PART NUMBER	Rev.	ISSUED
A	MDCLFN8X13CPR	01	2026-10-16
SCALE: 3.902	Unless otherwise specified Dimensions are in MILLIMETERS		